68067

UNITED NATIONS

ECONOMIC AND SOCIAL COUNCIL

Distr.
LIMITED

E/CN.14/CAS.4/DEV/1
8 April 1965

Original: ENGLISH

ECONOMIC COMMISSION FOR AFRICA
Working Group of Statisticians
and Planners
Addis Ababa

STATISTICAL DEVELOPMENT IN AFRICA

(Note prepared by the secretariat)

65-1142

Foreword

1. With independence and a move towards more rapid economic development, the provision of more adequate statistical information about Africa has become a question of greatly increased importance. It is appreciated by the countries that planning has to be based on a proper analysis of the current situation and on an assessment of the probable over-all effects of the various projects contemplated and that a continuous evaluation must be made of progress in the work of development. For these purposes a large amount of quantitative information is needed in respect of all the essential economic and social factors.

2. This paper has been prepared at the request of the Third Conference of African Statisticians, which was held in Addis Ababa in October 1963 and is an extension of the discussion which took place at that meeting. It is an attempt to suggest how comprehensive statistical programmes might be developed in African countries, taking due consideration of local conditions and the limitations imposed by the availability of statistical resources.

3. It is not the first paper dealing with statistical programmes in areas such as Africa and acknowledgement must be made to Statistical Series for the Use of Less Developed Countries in Programmes of Economic and Social Development, Series M, No. 31, prepared by the United Nations Statistical Office, New York. Full use has been made of the material contained in this document, although the present approach is somewhat different in that more emphasis has been placed on ways in which the collection of data might be organized.

4. Acknowledgement must also be made to the United Nations Statistical Office, the United Nations Specialized Agencies, other United Nations Regional Commissions and agencies which have contributed comments of help in preparing this paper.

5. It should be noted that the paper does not pretend to present any final conclusions on the problems of statistical development in Africa. The suggestions that are made have been formulated on the basis of current working experience and they are given here in the form of propositions which are intended for further examination.

STATISTICAL DEVELOPMENT IN AFRICA

CONTENTS

STATISTICAL DEVELOPMENT IN AFRICA

General considerations

Statistical development as a co-operative project

1. While the establishment of adequate statistical services in Africa will undoubtedly be a lengthy and difficult process, there is already the advantage that development in the field of statistics is regarded to a large extent as a co-operative effort of the countries. It has been accepted that technical and practical problems need to be examined on a joint basis and that new experience and techniques arising from work under African conditions should be made available throughout the region. Individual statistical services must, of course, give priority to meeting the requirements of their own countries, but exchange of information on technical matters is enabling these requirements to be met more quickly. There are also the additional advantages that co-operation helps to promote international comparability of data and the liaison between national statistical services forms one of the preliminary steps towards closer co-ordination in the wider field of economic development.

2. The idea of statistical development as a project for international co-operation is not new. Note must be taken of the earlier work of technical teams which did much to establish a similarity of approach in the French-speaking African countries. For English-speaking countries, the Conference of Commonwealth Statisticians enabled some exchange of views, not only between African countries, but also with those in other parts of the world. During the 1950s, the United Nations and its Specialized Agencies, CCTA and bilateral agencies helped to ensure the circulation of views and information by maintaining contact with the countries and by organizing meetings, etc. The initiative of the countries themselves was not lacking and specific problems were discussed on an international basis in addition to the maintenance of ad hoc contacts through visits and correspondence.

3. The first comprehensive effort by the United Nations to assist the development of statistics in Africa came soon after the establishment of the Economic Commission for Africa in 1958. The Commission introduced

the Conference of African Statisticians as one of its standing sub-committees and this has since become one of the principal organizations enabling an interchange of statistical views. The Conference controls the work programme of the Statistics and Demography Division of the ECA secretariat and the greater part of this programme is designed to give direct assistance to statistical development in the countries. It is not the purpose of this paper to review the programme, but it may be noted that much of the work was initiated under the project named, perhaps erroneously, the Statistical Survey of Africa. The Survey is linked with training programmes, a regional advisory service and research on technical subjects, as well as consultations with governments and liaison with country statistical experts. The general aim is to help countries solve their statistical problems by enabling closer contacts and by supplying technical assistance.

The present status of statistical development

4. Although all countries are now keen to develop their statistics as rapidly as possible and the machinery for international communication is becoming more effective, it must be appreciated that there is a very wide variation in the progress of statistical development between African countries. It is not very satisfactory to attempt to generalize on this question, but the principal factors which need to be considered are the state of development achieved before independence, the immediate effect of independence on statistical services and the changes which have since taken place. Perhaps the last named of these provides some justification for taking an optimistic view of future prospects.

5. Briefly, African countries can be divided into four groups with respect to their statistical services, although there are considerable variations within each of these groups.

6. Firstly, there are those countries which had reasonably good statistical organizations before independence and where it was possible to maintain continuity of work after the change of government. These countries are clearly in the most fortunate position because the technical and structural

development of their statistical services has been able to continue without interruption. Like other African countries, however, they are faced with the need for replacing expatriate technicians with local officers as quickly as possible.

7. A few countries are less fortunate because the political situation at the time of independence resulted in such rapid withdrawal of expatriates that the statistical service virtually disappeared. These countries are now in process of building up new statistical organizations and often have the advantages that at least some experience remains of previous activities and help in the work of reconstruction can be obtained from bilateral sources.

8. Thirdly, there are the countries where independence has necessitated a change in the statistical structure and these are mainly the ones which were served by an organization working on a common service basis. With independence, it has been necessary to divide the previous central organization, at least in part, into separate national components. In such cases, all the previous experience remains, but the division necessarily leads to temporary difficulties in respect of staff, organization, etc.

9. Finally, we have to consider countries where little statistical work has been done in the past. These are now building up statistical offices without the assistance of any previous local experience, although population and agricultural censuses and other work may have been carried out previously by visiting teams of technicians. These countries obviously have much to gain if they can draw on the experience of their neighbours.

10. The comments in the above paragraphs deal only with the differences in statistical development arising from the situation before independence and the results of independence. More important are the changes taking place at the present time.

11. It seems fairly clear that the current growth of statistical organizations is dependent almost entirely on the interest of governments in economic and social planning and on their ability to pursue this activity on a proper technical basis. As soon as planning begins in earnest, a statistical office finds itself in a relatively strong position and is

required to embark on a programme of expansion. Under these circumstances, it usually gets high priority in respect of recruitment. This situation has already arisen in a number of countries and it has been shown that, under suitable conditions, statistics can develop very rapidly. One factor relevant in this connexion is that planning requirements provide a much broader basis for statistical activity and the work tends to lose its routine character, while, at the same time greater thought has to be given to organizing the collection of data which can be amalgamated to form a reasonably satisfactory and comprehensive picture of the economy.

12. There are many factors which affect the length of time taken by a country to establish its planning operations on a good technical basis, but there is no doubt that this is the general aim which African countries have in mind at the present time.

The growth of technical planning activities

13. It is necessary to say a word about what is meant by "planning" in the context of this paper and it should be clearly understood that no suggestion is made concerning the desirable objectives and scope of central planning. A country may decide to control its economy on a highly centralized basis with the government participating to a large degree as an entrepreneur, or, alternatively, the arrangement may favour the encouragement of private enterprise while the government exerts indirect control, mainly through its financial and fiscal policy. The choice is a matter for the countries themselves and is dependent on particular circumstances. The only point which should be made here is that, whatever form of economic control and development is adopted, a government needs to know the current state of the country's economy and be able to estimate the over-all effects of any changes which are taking place. This requirement should be one of the principal considerations in organizing a statistical programme and, to a large extent, forms the background to the ideas expressed in this paper.

14. Most African countries, either before or after independence, have produced a first development plan. Normally this has necessarily been

based on insufficient quantitative information and, while giving a clear indication of the country's outlook and intentions, has not provided the basis for a fully effective programme of work. Subsequent plans have usually shown an improvement, although satisfactory data has still been lacking.

15. A very few African countries have been able to make considerable progress in the technical aspects of planning. Their experience has shown that there are advantages in flexible arrangements which enable the fullest utilization of available crude data. The principal requirement in this respect is a satisfactory current economic picture presented in a co-ordinated manner, with sufficient knowledge of the relationships between sectors to enable projections to be made on an empirical basis. In addition there is the need for more detailed information for planning in individual sectors.

The need for documents on statistical programming

16. Having reached the stage where at least a few countries are establishing planning operations on sound technical principles and where most countries are in a position to develop their statistical services, it is clear that the time has come when it is necessary to give some thought to the over-all nature of the statistical programmes which will supply the data for planning and other purposes. We are now gradually leaving the situation where international co-operation and technical assistance activities were concerned mainly with training, the initiation of basic work and the solution of urgent specific problems and are approaching the stage where the aims and objectives of the developing statistical services have to be considered in a more comprehensive manner. It is with this in mind that the present paper has been written. The paper does not pretend to present any final solution to the question of statistical programming, but it is an attempt to consolidate current experience and thinking in the form of a working document which can be improved in the future when more is learned from practical operations in the countries.

17. In those parts of the world which contain underdeveloped countries it has been recognized for some time that there is a need for documents which give guidance on statistical programming. The first of these documents was Statistical Series for the Use of Less Developed Countries in Programmes of Economic and Social Development, Series M, No.31, produced by the UN Statistical Office in 1959. The Economic Commission for Latin America and the Conference of Asian Statisticians have already carried out work in this field, which they are continuing to develop. The Conference of African Statisticians, which is a relatively young organization, produced a list of basic statistics at its first meeting and has since kept the question under review, but no detailed paper on the subject has previously been issued by ECA.

18. The Third Conference of African Statisticians in October 1963 discussed a number of basic propositions relating to the development of statistical programmes for planning purposes and the ECA secretariat was requested to continue its work in this field. The present paper incorporates the views expressed by the Conference, but it should be understood that it is intended only as a working document which will be amended in the light of further discussion and experience.

Approach adopted in present paper

19. The general aim of the paper is to produce proposals for statistical programming in the light of information requirements for planning and other purposes within the context of the practicable structural development of a statistical service. This approach requires a somewhat different presentation from that adopted in Series M, No 31 and other similar documents. It is first necessary to examine the nature of the requirements with the object of establishing the broad basis for a statistical programme and the process by which it should be developed and this has to be followed by some consideration of the practical organization involved in collecting and processing the data. This part of the work necessarily includes suggestions regarding subjects which should be tackled in the early stages of statistical development, but proposals concerning longer

term priorities have been avoided as far as possible since these are dependent on the requirements of individual countries.

20. Having established conclusions of a broad and flexible nature relating to the content and development of statistical programmes likely to be needed under African conditions and having considered briefly the practical implications of such programmes, it is then possible to proceed to a more detailed examination of the development of each subject. This forms the fourth part of the paper and it should be noted that the grouping of subjects is somewhat different from that in Series M, No 31, etc. The arrangement is by type of subject and method of collection, which is a compromise intended to conform with the possible final structure of a statistical service. In a general document of this sort it is not, of course, possible to give full details of individual statistical series and their limitations and, for this purpose, more specialized publications have to be consulted.

21. In compiling the paper we have drawn on the experience of national statistical organizations, as well as on that of existing advisory services and have taken into account the views of a number of other agencies. The type of programme suggested is based on an assessment of probable national requirements and on the internationally agreed objectives of agencies working in specialized fields. It is, of course, necessary for individual countries to modify the proposals to meet their specific needs and the general outlook of the paper may require some revision as planning and other requirements are clarified. Less emphasis has been placed on producing a list of statistical items than on indicating the broad lines of statistical development and the uses of information for practical purposes. The theme of the argument is that statistics in African countries should aim at a highly integrated account of resources, structure and activities and that statistical operations should, as far as possible, avoid concentration on isolated topics.

The scope of work of a national statistical service

22. In discussing the content and development of national statistical

programmes it is clearly necessary to have some idea of the limits of responsibility of a statistical service, as there would otherwise be the danger of adding items ad infinitum. This paper assumes that the central organization dealing with statistical matters must concentrate firstly on economic and social information for global and sectoral analysis and that it does not normally deal with data for project analysis. Its second principal function is to provide an information service for commercial firms, the public and overseas agencies. This may involve data below the sector level, but work in this connexion has to take a lower priority. Under these circumstances, a central statistical service is not expected to provide the complete range of information needed in a country, but it does have direct responsibility for or technical control over the major items.

Information requirements and uses

Introduction

23. Before proceeding to a more detailed discussion it is necessary to make a broad review of the requirements for statistical information and its uses. In doing this, the aims are to provide a general background to the suggestions made with respect to individual subjects and to indicate the means by which all statistical activities can be regarded as parts of an integrated programme. The review is in the nature of a preliminary attempt because it is only in recent years that comprehensive thinking on statistical programming has begun to develop and it is likely that modification of the views presented will be needed in the future. The section is divided into two parts, dealing separately with information for planning purposes and other requirements.

Information for planning purposes

General

24. As stated in the introductory section, this paper does not advocate any particular national policy with respect to economic and social matters and it should be borne in mind that the statistical and planning operations to which reference is made are applicable equally to countries with market

economies and those which aim at more detailed central control. It is appreciated, however, that differences in economic organization do give rise to some variation in statistical concepts and to the way in which data is used.

25. Basically, the technical aspect of planning may be described as the establishment of a comprehensive quantitative account of the essential features of an economy in such a way that it is possible to examine the relationships between the various economic aggregates and make projections to show the over-all effect of a change in any of these aggregates or its components. The account must be considered "dynamic" in the sense that it deals with flows of goods, services and payments and the availability of human and material resources on which these flows are dependent within the framework of the economic and social institutional arrangements. The situation thus presented has to be considered in the light of current economic and social policy and many of the factors concerned may be in a constant state of change. Clearly, the position in any country, however small, is very complicated and any attempt to describe it in an integrated and quantitative manner must necessarily be crude.

26. However, most countries have now come to the conclusion that such an attempt has to be made. All governments have responsibility in varying degree for the control of national economic and social activity and most would agree that this is now a matter which must be approached on a sound technical basis. The only way of achieving a satisfactory balance between the various branches of activity is to have a means of assessing the over-all effects of each of the principal components and their inter-relationships and this can be done only through a comprehensive statistical account.

The status of national accounts in statistics for planning purposes

27. The Third Conference of African Statisticians criticised the use of national accounts as the basis for statistical programmes on the grounds that the coverage of the information in such accounts was insufficient for planning and other purposes. Particular reference was made to the need for more detailed information for sector planning and to the question of

functional relationships, which were not fully catered for in the accounts. However, the various systems of national accounts and related methods of presenting data are the only attempts so far made to produce a comprehensive economic picture at the national level and the requirements of these systems clearly cannot be ignored in any satisfactory statistical programme. It is therefore necessary to examine their function in a little more detail with a view to determining what they do contribute and what additional information needs to be added.

28. For this purpose, reference is made here to the UN System of National Accounts (SNA) and to the recent proposal for its revision, although it should be appreciated that, within the limits of international comparability, the accounting system for any economy must be adapted to its individual needs, particularly in respect of the structure of the economy, availability of statistics and level of work in the planning office.

29. The SNA is intended to provide a picture of the broad structure of an economy in terms of the payments flows which take place within the country and with the rest of the world. It gives a number of very useful aggregates which serve as indicators of the state of the economy and, when an industrial breakdown of the national income and domestic product accounts is included, the system shows the relative importance of the various branches of productive activity. However, in its consolidated form, i.e. the standard accounts, the system includes few details and therefore could not serve as a means of analysing the economy in depth. In particular, it does not include transactions in intermediate goods, although a knowledge of these is implied in the supporting tables.

30. When seen only in this light, the SNA, or any other system of national accounts, would appear very inadequate as a basis for a statistical programme. Such an outlook, however, omits consideration of two important points. Firstly, in compiling a satisfactory set of accounts, a large amount of additional background information is essential. Secondly, the accounts themselves are not a rigid structure and can accommodate considerable modification without any change in their basic nature.

31. In Annex III an illustration is given of how the standard accounts of the SNA might be extended to give a more comprehensive view of productive activity. It should be understood, however, that this is not suggested as an international adaptation of the accounts, but simply shows one possible arrangement.

32. The completion of the national income and domestic product accounts of the SNA, or extended versions of these accounts of the type shown in Annex III, involves a rather comprehensive knowledge of all productive and distributive activities in terms of payments. The collection of this data embraces a number of statistical operations and is a formidable task for which the work has to be developed over a considerable period. In some cases, e.g. industrial production, direct records of the various types of payment can be obtained, while in other cases such as agriculture, it is often necessary to arrive at values from estimates of physical production and price data. The classification of intermediate and final products is a problem of particular difficulty.

33. The account dealing with households and unincorporated enterprises amounts to a summary of the receipts and payments of the personal sector and much of the information can be obtained only through household surveys. Perhaps the most important point for consideration is the very close link between the household and production accounts. For a large part of agriculture, handicrafts, etc. the household is the producing unit and households also supply manpower for all other enterprises. The collection of information on production and the private activities of households will therefore sometimes form the subjects of a single enquiry, but there are always important items which are common to both the production and household accounts.

34. General government transactions are in a somewhat different position in that these are usually recorded in detail and the problem is to centralize the data and arrange it in a form which is useful for economic analysis. The information required for the general government account covers the full range of public finance statistics.

35. The capital reconciliation accounts of the SNA and the savings/investment account in Annex III cover all forms of domestic capital formation and changes in stock, together with the sources of finance for these items. Special enquiries are sometimes necessary, but data collection would normally be part of the other operations to which reference is made in this paper. The importance of these accounts must be stressed because the structure of capital formation is one of the main elements in African development plans and good current information in this field is necessary to show whether a plan is really being carried out. It is appreciated, however, that, at the present time, countries find it difficult to obtain all the information needed for the SNA capital accounts.

36. The rest of the world account involves the complete range of balance of payments information, including records of external trade. This must be regarded as the second principal element in African development planning. The essential requirements for national accounts in respect of trade statistics are that it should be possible to classify imports and exports on an industrial basis and divide imports between intermediate and final uses. However, it is assumed that countries would normally also make a detailed classification of this data according to the SITC or BTN.

37. From the above it is clear that national accounts do involve a considerable part of any statistical programme. In particular, they are concerned with much of the information relating to production and distribution, household budgets, public finance, capital formation, balance of payments and external trade. The principal use of the accounts is to bring this information together in a co-ordinated manner. Because of this integrating function with respect to statistics and because payments flows are the essential link between the various parts of an economy, it is important that the development of a satisfactory system of national accounts should be given full consideration in formulating a statistical programme.

38. It is equally clear, however, that national accounts cannot be the single controlling feature in a programme of statistical work. Considerable amplification is needed for sectoral analysis and other purposes and there

is other information important to planning, which, although forming the essential background to the pattern of payments flows, does not have a place within the system of accounts. It will be the purpose of the next few paragraphs to examine the additional information requirements.

Other statistical information for planning

39. The three important groups of data not covered directly by national accounts statistics are:

(1) Human resources and conditions of life;
(2) Material resources;
(3) Quantities of current production and distribution.

All this information is the essential counterpart of the payments flows on which the national accounts are based. It describes the national economic and social structure which gives rise to the payments and provides details of the flows of goods and services associated with them. The material is also essential as the basis for projections and provides the additional information necessary for sector analysis.

40. To the first three groups it is necessary to add two more, which imply further analysis and amplification rather than the addition of completely new items. These are:

(4) Finance;
(5) Breakdowns of national accounts data for special purposes.

41. There is no doubt that human resources should take first place in all questions of national development. They are the essential part of a country's wealth and the labour force is the major factor of production. On the other hand, the population as a whole is also the principal consumer. All data having a bearing on manpower and population questions are therefore closely related to the production and household accounts previously discussed. In this rather general review it is not appropriate to consider the details of the information required, but it seems that the principal items are characteristics and changes in respect of total population and labour force, social statistics including education, health and housing and

the characteristics of the population as consumers, in terms of income distribution and levels and patterns of consumption.

42. Material resources, together with human resources, form the background to the activity described by the production account and they may be considered in two groups. Firstly, there are the basic resources in the form of mineral wealth, soil, water supplies, climate, etc, which normally form the subject of special enquiries and do not come within the scope of a central statistical office. The second group of data relates to the structure of production and consists of quantitative information on the size and composition of the enterprises or establishments in the mining, manufacturing, construction, agriculture, service and other industries. It also includes information on the institutional and social arrangements under which production is conducted. It is clear that, without all this data, the flows included in the production account would have limited meaning for planning purposes.

43. The quantities of current production and distribution are the counterpart of the corresponding payments flows in the national accounts. While the payments analysis has the advantage that it can be presented as an integrated picture, there is obviously a need to know the quantities of goods and services associated with the transactions for purposes of more detailed planning and as a basis for projections, particularly at the sector level. Also it should be noted that this information, when taken in conjunction with that in value terms, gives rise to all the current economic indicators in the form of indices relating to wholesale and retail prices, trade, wages and productivity. It is appreciated that the development of national accounts statistics at constant prices does cover the question of changes in quantities, but this does not obviate the need for having the basic information in this respect.

44. In addition to information on the economic and social structure of a country and on the quantities and values of current production and consumption there are still other needs in providing an adequate basis for planning. One of these is information on finance, which includes the

nature and sources of funds available for investment in the various sectors, together with statements of assets and liabilities, including overseas balances. It is also necessary to have a good idea of the effect of government activities on the rest of the economy. Particularly when government takes a considerable part in productive activity as an entrepreneur, it is necessary to show information on this part of production separately from that relating to private enterprises. It should also be noted that a rather detailed classification of government accounts is always necessary.

Other statistical requirements

45. Statistical requirements other than those in respect of central planning, which are discussed above, arise from the need to provide an information service for commercial firms, the public and overseas agencies. It is clear that the greater part of the needs of these consumers of data is already covered by planning requirements for information and, to the extent that this is the case, the burden which falls on the statistical office in providing the information service is simply the collation and distribution of the material requested.

46. Nevertheless, some additional requirements do arise. The information requested by enterprises is usually intended to assist them in assessing their individual competitive positions and the probable consumer demand for specific products. Very often this involves a more detailed breakdown of external trade data than would be given in the SITC or BTN classifications. A statistical office may also be asked to provide information on particular problems or projects, or to carry out special analysis of existing data. In addition, it is necessary to bear in mind the requirements for research carried out within Africa and elsewhere. Some of this work necessarily falls outside the scope of information for global or sectoral analysis, which has been suggested as the desirable limit to the functions of a central statistical service. This position has to be accepted if a statistical office is to go much beyond the provision of information for the planning agency and, in most countries, it has to do so because

information is required for the development of private industry and because the enterprises and others who supply basic statistical data expect some assistance in return.

Summary of conclusions

47. From the review made above, it would appear that statistical requirements for planning and other purposes can be considered under six main headings:

(1) Human resources: population, manpower and living conditions;
(2) Material resources: inventory of basic resources, structure of production;
(3) Current production and consumption: quantities and values of intermediate and final transactions;
(4) Public finance;
(5) Other financial statistics;
(6) Balance of payments and external trade.

48. The first two groups indicate the economic and social structure within which all national activity takes place, while the last four relate to current activity in value and, where applicable, quantity terms. As indicated previously, the inventory of basic resources is not normally a responsibility of the statistical office. It should also be noted that the groups are not mutually exclusive. For example, living conditions are dependent on income distribution, patterns of consumption and social conditions, which are closely related to current production and consumption and to some items of public finance.

49. Throughout the argument stress has been placed on the close relationship between all aspects of economic and social statistics and the consequent need to maintain a comprehensive view of the entire field when considering data collection and analysis. The individual subjects are not isolated entities and, if they are considered as such, there is danger of imbalance and lack of consistency in the statistical programme. Changes related to any one subject have repercussions in other branches of activity and the dynamic nature of the statistical framework has to be borne continuously in mind. There is also the point that, particularly in the

early stages of statistical development, the comprehensive approach enables the best possible use to be made of incomplete data because it provides the means of making a wide range of consistency checks and adjustments. This does not, of course, in any way reduce the need for regarding continuous improvement in quality of data as a major objective.

50. The section has, perhaps, dealt rather lightly with the question of the uses of statistical data, particularly with respect to planning and this arises mainly from the definition of the statistical aspects of planning given in paragraphs 13 - 15. Also, this part of the discussion has been of a rather general nature and, in any case, the paper is not intended as a detailed commentary on planning methods. More will be said about the uses of data in connexion with the development of individual subjects, but the desirable outlook seems to be that statistics as a whole should be regarded as a flexible but highly integrated tool. Under these circumstances it is capable of adaptation to any situation that may arise.

Statistical organization

Introduction

51. The general review of information requirements in the last section was intended to provide the technical background for discussing the content and development of statistical programmes. It is now necessary to examine the nature and structure of the organization which would carry out the work, in order to indicate the practical setting for statistical development and the way in which individual subjects should be grouped. This is particularly important because the statistical organization itself and the rate at which it can be developed, is necessarily one of the factors controlling the programme of work.

52. After an examination of some general principles, the section deals with staff recruitment and training, the common services needed for statistical operations and the arrangement of substantive work, followed by some brief comments on the size of the organization. It should be appreciated that there are alternatives to some of the arrangements suggested which have

been omitted for the sake of brevity and clarity. On a number of topics the section is simply presenting conclusions which have already been reached by the Conference of African Statisticians.

General principles

Independent status and link with planning agency

53. It is clearly necessary that there should be a very close link between the statistical office and the planning agency, which is the main consumer of statistical data, but, except in a few countries, it has been recognized that the two bodies should be separate and that the statistical service should have a reasonable degree of independence in arranging its programme of work.

54. In the early stages of development, however, there may be some justification for adopting a different arrangement. At the time when a first development plan is established, the statistical office may be working wholly for the planning agency and simpler operating methods and more efficient use of limited resources may be achieved if it is attached directly to that agency for a limited period. This arrangement has been utilized in some Eastern European countries, but it might not be very satisfactory in Africa, as statistical offices have usually been established well in advance of planning agencies.

55. Under any circumstances, it is not long before the time comes when there is need for impartial evaluation of planning activities and the development of an information service for commercial enterprises, the public, etc. These requirements can be met satisfactorily only by organizing the statistical service on an independent basis.

56. There are a number of arrangements whereby the link between statistics and planning can be maintained without affecting the independence of the former. One method is to attach the two organizations to the same ministry. Sometimes this is the office of the head of State and sometimes a ministry dealing with economic development, the most effective location being in all cases dependent on particular circumstances. Secondly, the

heads of the statistical service and the planning agency can both be members of a co-ordinating committee responsible for development. At a lower level there is, finally, the day-to-day contact between the members of the two organizations in the course of their normal work, together with the possibility of some interchangeability of staff.

57. One important point which is usually stressed in connexion with the independence of the statistical service relates to responsibility for the publication of information. This should rest with the head of the statistical organization and not with the ministry to which the organization is attached. The aim is to ensure the provision of impartial data, but such a general rule may, of course, be subject to overriding security considerations.

58. Another essential factor in this connexion is the maintenance of the non-policy nature of the statistical service. The service should not be responsible for any decisions with respect to planning, otherwise it immediately loses its impartial character. This does not imply that it should not produce economic reviews, etc. Many statistical services undertake the preparation of an annual economic survey and such documents are simply a means of consolidating available information and interpreting it in an impartial manner.

59. Because most statistical enquiries take time to plan, execute and analyse, it is necessary for the statistical organization, in arranging its programme of work, to forecast data requirements for planning and other purposes well in advance. In the case of some subjects the needs are usually fairly clear, but, for others, the best course of action is not so obvious. Normally a statistical office can expect very little useful help from other government agencies in this respect and it has to rely very much on its own resources. More often than not, it does, in fact, have to resist demands which would upset the balance of its programme and diminish the possibility of obtaining comprehensive statistics.

Centralized organization

60. The second general principle is that, particularly at an early stage

of development, it is necessary for the statistical service to be highly centralized in order to avoid waste of manpower and other difficulties arising from the division of work on a subject basis between ministries. This has an important bearing on the quality and punctuality of data and on its usefulness within the context of a statistical programme.

61. However, there are factors which prevent the complete centralization of all statistical operations. When a statistical office is first established in a country, it is usually found that there is already some statistical work being undertaken by other ministries. Much of this does need to be transferred to the statistical office, but whether this should be done immediately must depend on the priorities within the statistical programme and the resources available. The latter are perhaps not so important in this connexion because, when work is taken over from other ministries, it is usually also possible to transfer the staff engaged on it.

62. In addition, there are some subjects, such as current agricultural statistics, which are not easily incorporated in a centralized statistical programme and there is some data which, because of its specialized nature, cannot readily be handled by a statistical office. Apart from this, there is information arising from administrative activities which necessarily has to be compiled in conjunction with these activities.

63. Within the limitations noted above, the general aim should be centralization of statistical work. Even in the case of data collected by other agencies, the statistical office has an important responsibility with respect to the technical planning of enquiries, standardization of definitions and the presentation of the information. Co-ordinating committees have been found very useful for this purpose.

Flexible internal structure

64. Most statistical services have to start with a fairly limited range of activities which is gradually extended and this implies that their structure should be developed concurrently with their work. It must also be taken into consideration that modifications to the statistical programme are likely to be necessary as the result of new requirements and changes in

priorities. It is therefore necessary that a statistical service should not be regarded as a rigid organization and that its internal structure should be sufficiently flexible to accommodate both the extension of work and changes in the balance between subjects. This question is referred to again below in connexion with the common services needed in conducting statistical activities and the arrangement of substantive work.

Legislation

65. Proper legislation is necessary to support and control the functions of a statistical service. It should describe the responsibilities of the service, but this should be done in terms which are sufficiently broad to allow for the flexibility referred to in paragraph 64. The law should stress the secrecy of information obtained by statistical questionnaires and should expressly forbid the statistical authorities to divulge any information in respect of individual enterprises, persons, etc to any other agency. On the other hand, while the importance of building up a co-operative attitude on the part of respondents is appreciated, it is necessary that there should be wide legal powers for the collection of statistics. It is normally sufficient for such powers to exist and prosecutions can and should be avoided as far as possible.

66. A statistical law which is strongly formulated on the two points of secrecy and compulsion helps considerably to ensure the success of censuses and surveys of all types.

Staff recruitment and training

General

67. Staff recruitment and training remains one of the major problems facing African statistical organizations. More rapid development and the departure of expatriate technicians have led to keen competition for the limited supplies of local trained manpower and there is the additional problem that, in some countries, deficiencies in basic education have to be made good before specialized training can be given. It therefore has to be accepted that it will take some time to build up an adequate number of

statisticians and supporting staff and, even when this has been done, operational experience still has to be acquired before these people can become fully effective in their work.

68. As most African countries are now giving their statistical services high priority with respect to allocation of financial resources, the staff position must be regarded as the most serious factor limiting the work which can be accomplished. This is reflected in the rather gradual development of statistical programmes in spite of urgent demands from the planning agencies and in the consequent need for very careful determination of priorities in the early stages of development.

Professional staff

69. Long term development of a statistical service can be really effective only if there is continuity in its activities and, to achieve this, it is necessary to avoid frequent changes in the senior staff. Quite apart from any national considerations, early **Africanization** must therefore be a primary objective.

70. However, the demand for statistics is such that rapid expansion is essential, which means that there is an interim period when expatriates must be employed, either through technical assistance, or by direct contract. The functions of these people are to fill the existing gap in staff and to give guidance to newly recruited local officers when they become available, as well as to assist in establishing good technical foundations for the principal subjects.

71. At the time of independence some countries already have a small number of local professionals in the statistical office. In less fortunate countries there are usually a few people in other ministries who are qualified for statistical work. The extent to which they can be brought together to form the nucleus of a statistical service is, of course, dependent on the priority given to its development. However, in both cases, the numbers involved are small and it is usually necessary to obtain the bulk of the local professional staff through a training programme.

72. Most medium sized African countries are thinking in terms of a statistical service with about 20 professionals. Let us suppose that, in a given country, four professionals are available at the outset and that the problem is to obtain the remaining 16. It can be expected that the output of secondary school graduates of university calibre is fairly low and that other ministries and commercial firms are competing for these people. Nevertheless, it seems reasonable to suppose that six students could be sent for training in the first year and three in each subsequent year. Then if the university course lasts for three years and the wastage rate is 30 per cent, it will take 10 years to obtain the 16 recruits. This example, which does not take account of the possibility of employing graduates other than those resulting from the statistical training programme, indicates the maximum length of time which should be considered reasonable for achieving full Africanization with properly qualified staff and it should be noted that many countries are completing the process much more quickly. In general, it may be assumed that the interim period when expatriates are needed to fill the gap in senior staff lasts for 5 - 10 years after independence. Following this period, the only outside assistance which should be required is technical advice in specific fields.

73. A requirement of special importance is to earmark a suitable local person for the directorship of the statistical service and this should be done as early as possible. Academic qualifications need special consideration and the person selected should preferably have a degree in economics or the social sciences, with either a fairly heavy statistical emphasis or a post-graduate course in statistics; his training should not be confined to statistics. His initiation may take some time, as he needs to acquire a good knowledge of planning activities in addition to familiarizing himself with the work arising from the statistical programme. It is also important that he should have the opportunity of participating in the formulation of this programme, even before he assumes full control of the organization.

Non-professional staff

74. The essential point relating to the recruitment of staff at the

clerical level is that those appointed should include a reasonable proportion of people with secondary school training who may later be expected to become the executive personnel of the organization. It is necessary to avoid the temptation to adopt the easy solution of filling the bulk of the clerical vacancies with primary school recruits (many of whom may be nominated by high ranking civil servants and politicians), because this can lead only to a much more difficult training problem and generally poorer quality, particularly with respect to candidates for promotion to executive posts.

75. The initial position in all countries is a general lack of executive staff and this cannot be avoided since overseas help is not normally available in this respect. The result is a heavier burden on the professionals, but there is one advantage in that the situation encourages the introduction of more carefully designed processing arrangements at the clerical level. While helping to reduce the need for supervision, this also constitutes a contribution to the long term efficiency of the organization.

Continuity of service

76. One of the greatest dangers to a developing statistical service is loss of trained local staff, particularly at the professional and executive levels. It has to be appreciated that there are other branches of government, notably the administrative and foreign services, which may be more attractive to young people with good education and which may provide prospects of speedier promotion. There are also commercial posts which are attractive by reason of higher salaries. It is very right and proper to say that statistical staff should be attached to their organization by a sense of vocation, but it is nevertheless necessary to keep the competitive position of the statistical service continuously under review with respect to personnel matters.

77. It is possible to ensure that salary levels are satisfactory in comparison with those in other branches of government and, in this connexion, the incremental awards made in respect of training undertaken before

first appointment are important. Government agencies cannot usually compete with commercial salaries, but the difference should be roughly offset by the greater security of tenure which they can offer.

78. A statistical service is fairly small in relation to other government agencies and, under some circumstances, this could lead to the problem of undue delays in promotion. The proportion of executive and professional posts is a relevant factor in this respect. The number of very senior posts, however, is necessarily limited and one possibility is to use the planning agency as an eventual promotion outlet. It has already been suggested in paragraph 56 that there would be some advantages in the interchangeability of staff between statistics and planning.

79. As most statistical services have to obtain the bulk of their professional staff from training programmes of the type considered in paragraph 72, they can ensure some continuity of service by bonding the students to serve in the organization for a minimum period after completion of training. This is important because otherwise commercial firms and other organizations tend to become the beneficiaries of the training programme.

Training

80. The training of professional statisticians is carried out by means of university and similar courses. Such facilities are becoming increasingly available in Africa and it is not necessary to discuss them in this paper. There are however, two points in connexion with professional training which should be mentioned. Firstly, it is necessary to make provision for people in junior posts to work their way up to professional level in order to avoid wastage of capable manpower. This question is referred to again below. Secondly there is the need for postgraduate training of some professional staff. Such training should preferably be undertaken after the acquisition of a reasonable amount of practical experience and the award of scholarships for this purpose should be dependent on the working performance of the individuals concerned.

81. Training of non-professional staff has to be considered in several stages, but it should be noted that the objective is to devise an arrangement whereby these various stages form parts of an integrated programme which can meet the needs of staff at all non-professional levels.

82. At the lowest level, various types of in-service training can be used to promote the general efficiency of clerical staff, to give them some idea of civil service organization and procedures and the general principles underlying statistical methodology, as well as to make good educational deficiencies. The last named is particularly important in the case of primary school recruits who have had much of their education in a local language which is not the working language of the civil service. The general induction courses provided by many governments for new recruits are of obvious value, but it is clear that training has to continue systematically within the various departments to which these people are allocated. Some statistical organizations have favoured the use of training officers, usually provided through technical assistance, but, at this level, there are advantages in "on-the-job" training by the professional staff of the office in respect of their own subjects.

83. The next stage is the training of clerical staff for junior executive posts and, for this purpose, the "middle level" international statistical centres have proved both popular and effective. Three such centres have been in operation since 1961, sponsored jointly by the United Nations and African governments. It is expected that at least one more will be established in the near future. These centres provide nine month full-time courses in statistical methodology and related subjects and attach considerable importance to practical exercises. Their level is roughly that of the Registered Statistical Assistant examination of the London Institute of Statisticians. There are also a number of purely national training schemes, some providing full-time and some part-time courses and, of these, one accepts foreign students.

84. The justification for the middle level centres was originally questioned because of difficulty in releasing staff for long periods of training and the

feeling that, at this level, practical working experience is more effective than formal training. The results of the centres have, however, shown that such an outlook is much too limited. The scheme was introduced initially as an emergency measure to help in remedying the acute shortage of executive staff which was seriously hampering the development of nearly all statistical offices and, in this, the arrangement has proved reasonably effective. It has also been found that many of the trainees passing through the centres are capable of absorbing a considerable amount of technical training and can be expected to make further progress in the future, provided their training can be continued. The second justification for the training centres is therefore that they have provided a means of making more effective long term use of available manpower than would have been possible through normal practical initiation in working procedures. A third point is, of course, that, in an understaffed statistical office, training activities tend to be somewhat neglected and the use of a separate institution for this purpose does ensure that the work is pursued consistently.

85. The third principal stage which has to be considered is the more advanced training of non-professional staff beyond the "middle" level. For French speaking countries an international centre already exists, which provides two year courses leading to the "attaché" level. Students who are successful in these courses have the further possibility of proceeding to "administrateur" courses in Paris or elsewhere. There is therefore continuity in the training arrangements for French speaking countries, which can enable staff to work their way from clerical to professional level. For English speaking countries at the present time, the only similar possibility is for a middle level trainee to take the RSA examination of the London Institute of Statisticians and then to work his way through the higher examinations of the Institute. This is not entirely unsatisfactory because a number of African countries are utilizing these examinations for appointment and promotion purposes, but it is clearly necessary that proper facilities should be developed within the region. The alternatives being studied are a separate institute on the same lines as that provided for

French speaking countries, or the use of existing university facilities. As a number of universities are already providing statistics courses and have expressed willingness to accept the middle-level type of student on a diploma basis, it would seem that the second of the two alternatives will probably prove the most satisfactory.

86. In addition to the regular training arrangements noted above, countries are beginning to make use of ad hoc courses at all levels to meet special requirements and to promote general interest and efficiency. With these should be coupled the various international co-operative activities, including study tours and seminars.

87. It is clearly necessary that all statistical training should be properly co-ordinated and the most effective method of achieving this at both the national and regional levels is through a statistical manpower budget. The budget should show the staff position and number of persons under training at each level in the current year, together with estimated staff and training requirements for future years, taking due account of wastage.

Common services in statistical organization

Statistical planning

88. In organizing the substantive work connected with a statistical programme there are two important considerations. Firstly, the need to achieve rapid development of the work at a time when staff resources are only just being built up requires that available professional manpower should be used as economically as possible. Secondly, an integrated programme of the type envisaged in the section of this paper dealing with information requirements and uses calls for standardization of definitions and classifications and close co-ordination of the work in different fields with the particular objective of ensuring consistency.

89. One method of meeting these requirements is to separate the function of statistical planning from the executive work of data collection and processing. The arrangement requires the establishment of a statistical

planning unit within the office and this should be staffed by relatively highly qualified professionals. The unit maintains continuous contact with all the statistical sections of the office and also with those which may exist in other ministries and undertakes for them the design of enquiries, drafting of questionnaires, etc and the planning of processing procedures. Work in the sections is then reduced to the executive activities of collecting and processing information and to the interpretation and presentation of results. The success of the method is, of course, dependent on the development of a close working understanding between the planning unit and the sections. It should also be borne in mind that there can be various degrees of centralization in the functions of planning and design and arrangements can be applied in a much more limited way than that described above. This paper is not advocating any particular approach, but is simply describing a method which is open to further discussion.

90. The concept of statistical planning, as described above, has been the subject of some criticism and has so far been adopted only in one African country, although it is under consideration elsewhere. It should be noted that the planning unit has a purely technical function within the programme of work in statistics. While it can undoubtedly make a useful contribution towards the formulation of this programme, this is not the primary function of the unit. Programming of work is the responsibility of the director of the statistical service, who may have the help of a co-ordinating committee consisting of representatives of other ministries, the planning agency, etc. Such a committee necessarily operates through periodic meetings and is something completely different from the planning unit, which has full-time responsibility for the technical implementation of the statistical programme.

91. The statisticians in the planning unit form a concentration of professional manpower which is concerned almost entirely with technical work, since the administrative functions remain with the individual sections. The division of labour is intended to make the fullest possible use of the technicians available and enables the sections to function under the control of less well-qualified officers. As the planning unit is concerned with field surveys as well as the development of other

statistics, its staff should include a sampling statistician in addition to economic statisticians. It is not envisaged that the unit would undertake detailed work on subjects such as national accounts which involve the secondary processing of data, but it would need to maintain close contact with the sections responsible. Part of its work on standardization, referred to in paragraph 88 would be the application of internationally agreed definitions and classifications under local conditions. A further possibility, which is under consideration in one country, is that the unit could take charge of statistical training activities.

Field survey organization and regional offices

92. The need for a field survey organization arises from the fact that, to achieve reasonably comprehensive statistical coverage, direct collection of information by enumeration is necessary and much of this must be obtained from households, small enterprises, etc. It is highly desirable that the organization should be established on a permanent basis because the data obtained is clearly more reliable if field staff can become experienced in their work through continuous operation. Very few types of survey can make satisfactory use of ad hoc staff and these are applicable mainly in urban areas where the possibility of intensive supervision is greater. A good field organization takes a considerable time to develop and it is important that work in this connexion should start at an early stage. If this is neglected, the result is either imbalance in the statistical programme over a long period, or, eventually, a hasty and unsatisfactory attempt to make good the lost ground.

93. The paragraphs dealing with staff recruitment and training made no specific mention of the survey organization because it is important that field staff should be treated in the same way as the remainder within the limits imposed by the differing nature of their work. It is usually found that officers at junior clerical level are satisfactory as enumerators in household surveys, while supervision of groups of 6 - 10 enumerators can be undertaken by more senior clerical officers. At a later stage of development, when the field organization is established on a regional basis and

when the scope of its work is extended, more executive staff are needed in the field and their grades should also be the same as those of headquarters staff at corresponding levels, or at least should be directly comparable. The essential point is that, although it is appreciated that the use of inexperienced staff in the earlier stages of development will normally prevent interchange between field and office personnel, such interchangeability does become a necessity before many years have passed if optimum use is to be made of the available manpower and if staff arrangements in the statistical service are to be both simple and flexible.

94. The functions of the field organization will be examined in more detail when the substantive programme of work is considered, but we may attempt to generalize here by saying that it is concerned primarily with economic and social information of a general nature, rather than with the collection of more specialized data which is properly the function of other ministries. The principal operational requirement is that the survey staff should be employed continuously throughout the year and this implies a very careful arrangement of the survey programme. A number of different topics may have to be covered within a given period and it is necessary to organize enquiries so that close co-ordination is achieved without incurring the well-known disadvantages of multi-purpose surveys. In connexion with the continuity of work, it should be noted that the timing of urban surveys is usually less critical than that of those in rural areas and this can be very useful in achieving a satisfactory programme, provided field staff are sufficiently mobile. Another important consideration is the cost of field equipment, transport and research into survey methodology, which is very heavy in the case of ad hoc enquiries, but which can be spread much more economically in a long term programme of surveys.

95. The development of field operations does not follow any rigid pattern and the course of events is dependent on the circumstances in individual countries. In some cases where there has been no earlier attempt to establish a field organization, a country may reach the stage where it has to embark on a fairly large programme of surveys on a purely ad hoc basis for the purpose of drawing up a development plan. This is clearly an

unsatisfactory situation, but, irrespective of the outcome of the enquiries, it is a means of training staff who may later be absorbed in a permanent organization. However, as indicated above, the best solution is achieved if the statistical office has the foresight to recognize at an early stage that it must develop such an organization.

96. The nucleus of a permanent field staff can be established in conjunction with earlier small enquiries, e.g. urban area household budget surveys, and there is then the possibility of progressive development of the work before larger operations become necessary. One convenient arrangement is to begin with, say, ten supervisors and 20 enumerators, the idea being that, initially, the supervisors would need to gain field experience by carrying out enumeration duties themselves and would have only limited capacity for supervision. Once this nucleus is operating efficiently, it is possible to expand more rapidly by putting new people to work with the more experienced members of the staff and a more realistic balance between the numbers of enumerators and supervisors can then be established. The actual rate of expansion can vary considerably and is dependent on local conditions and requirements.

97. It will be seen that the more gradual development of a field organization has the advantage of simplifying training in that much of this is achieved through normal field operations. Secondly, the earlier surveys are a means of developing methodology and experience gained in this way can do much to reduce the need for experimental and pilot enquiries. However, these advantages can be gained only if the development of the field organization is started soon enough. It should be noted that, during the earlier stages, the size of the organization and the variety of tasks it has to undertake make it necessary for it to operate on a highly mobile basis.

98. However, there is a change in the nature of the field organization during the course of time. Most countries find that they reach a stage in their statistical development where they have to establish regional statistical offices for the handling of returns of all types and to provide local information services. There is also a need for more continuous survey work in individual regions. When this time comes, it is possible to

stabilize the previously mobile field organization within the areas covered by the regional offices. Such an arrangement does, of course, require a fairly large increase in the number of enumerators and, in some countries, the total has risen to 200-300. In addition, there is the staffing of the regional offices and the appointment of a number of executive staff who are needed not only for supervisory purposes, but also for enumeration duties at a higher level, e.g. visits to commercial firms. Nevertheless, it must be appreciated that the cost of a field organization developed along these lines is not so great as it might appear because, with the exeeption of specialized information obtained by other ministries, the scope of its work is extended beyond household and other surveys to include the collection of current and structural data of all types and, in addition, it forms the nucleus of the organization needed for population censuses and other large scale periodic operations.

99. A further word should perhaps be said about the regional offices. From the above comments it will be seen that they are primarily intended as outposts of the central statistical office, operating as collecting units for information of all types and also have responsibility for meeting local demands for data. Sometimes their responsibilities may go further than this, as some countries have regions whose character is different from the remainder by reason of different physical conditions, language, etc. and, in such cases, the regional offices may be concerned with adaption of methodology and special data requirements. Finally, there is the not insignificant point that these offices provide a much closer link between the field and office staff and enable some interchange of personnel. Also, because of the greater variety of work, the interest of staff members is more easily maintained and the reduced geographical mobility makes it possible for them to establish more satisfactory domestic arrangements.

Data processing

100. The use of mechanical or electronic data processing equipment is a rather specialized subject and it is not appropriate that it should be considered in detail in this paper. However, the facilities provided by

such equipment are now considered an essential service in a statistical organization and the statistical offices of most countries either possess or have access to an installation.

101. In some cases the initial set of equipment is acquired when the statistical office takes over external trade statistics from the customs department, while in others the processing requirements of a population census are responsible. The initial justification nearly always arises from a bulk processing task, following which it is possible to extend the use of the equipment to other subjects.

102. While data processing equipment can rightly be considered essential, it should not be regarded as a complete and invariable solution to problems of handling statistical information. Its effective use is dependent on a good understanding of the capabilities of the available equipment, the training of good programming and operating staff and the arrangement of the work on different subjects to make proper use of machine time and to avoid bottlenecks.

103. It is always important to consider the length of time needed for preparatory work before the machines can actually begin to operate on any given task. This includes the assembly of the data in suitable form and its coding and transfer to punch cards, tape, etc, as well as the preparation of a machine programme. In some cases the time required for this work may be such that a hand analysis is quicker. Another consideration is that continuous access to the basic data can be maintained during the course of hand processing and this can be important in cases where many queries are likely to arise. In addition, some work may be conveniently undertaken by semi-mechanized methods, e.g. edge-punched cards.

104. When a statistical office is faced with a large ad hoc processing operation, such as the analysis of a population census, local processing usually necessitates either a new installation or the expansion of an existing one. Some reduction in difficulty and cost may be achieved by using overseas facilities on a service basis and these now appear to be readily available. However, there is the problem of transporting basic

documents or cards and the disadvantage that there is less chance of making adjustments in the analysis programme during the course of its execution. For these reasons and because, as indicated in paragraph 101, countries often like to take the opportunity of establishing or developing their own installations in conjunction with the larger analysis tasks, there is usually a preference for carrying out the work locally, if this is at all possible.

105. Although it is clearly desirable for a statistical office to have its own installation, it is necessary to consider the question of shared data processing facilities. The situation is dependent on the type of equipment used and on the amount of work to be done. With electronic equipment there is a stronger case for centralized processing than there is with mechanical punch card machines, but such an arrangement can be effective only if it is administered well enough to ensure an even flow of work. Departments dealing with accounts are sometimes reluctant to rely on shared facilities.

106. Data processing equipment is developing very rapidly and new and improved machines are continuously becoming available. It is therefore desirable that statistical offices which may have started with conventional punch card units should be in a position to employ more up-to-date equipment when the need and opportunity arise. This is important, not only in respect of increased capacity for handling data, but also in the type of analysis which can be carried out. For example, a computer is needed for the more intensive work involved in demand analysis. There are therefore advantages in hiring machines rather than in purchasing them outright, because disposal and exchange problems are then very much simpler.

107. The amount of data processing equipment in Africa is steadily increasing, but it must be expected that its principal application will continue to be in the field of accounting. As a result, machine company representatives are not always in a good position to advise on statistical processing. In addition, each company is naturally anxious to increase the level of its own business. A careful assessment of the various possibilities is therefore necessary before selecting new equipment and it is often

advisable to obtain impartial advice. Servicing facilities are a major factor affecting the suitability of equipment.

108. The training of operators for data processing equipment does not usually present any undue difficulty, but programming staff for computers need rather careful consideration and their training should begin well before the machines are actually installed. It is also necessary to establish a close link between the data processing team and the substantive sections of the statistical office and one method which has been suggested for achieving this is to locate the programming staff in the statistical planning unit referred to above. There is an advantage in training mathematical or statistical graduates as programmers to ensure a better understanding of the data being processed and the objectives of the analysis.

Information

109. The establishment of a statistical library is a specialized task involving exchange agreements, classification system, etc. However, experience has shown that a well-ordered and useful reference library of statistical publications can be established by one person without formal library training, provided he or she is genuinely interested in the work. It is necessary to make an early start, as it takes a long time to build up a satisfactory reference unit. One possible initial step is to obtain a comprehensive set of the UN documents on methodology. Reference is made in Annex II to many of these documents which deal with accepted standard procedures in various fields and which outline methods of work.

110. The cost of obtaining other publications may not be too great if extensive use is made of exchange agreements with universities and governments. Such agencies are normally willing to provide their own publications in exchange for those of a national statistical service. The library should be regarded as a general service for government and its use should not be confined to the statistical office alone.

111. The routine publications of a statistical office usually include a quarterly or monthly digest of statistics and, later, an annual abstract. In the earlier stages of development, the work on the digest, which should

be one of the first projects, has to be undertaken by the substantive sections of the office, but when the stage is reached where its compilation becomes a largely routine function, a small unit becomes necessary to collect current data from the sections dealing with individual subjects and to keep the tables up-to-date. The unit later expands its work to include the preparation of an annual abstract of statistics and may undertake the editing of other routine publications and the answering of ad hoc enquiries for information, as well as the supply of data to international agencies.

112. Unless the government already possesses a very speedy printing service, it would be wise for the statistical office to introduce its own printing facilities, which would be used for the preparation of both publications and forms. Delays in the issue of the more urgently required publications, such as trade accounts and digests, can easily be avoided by this means and it is important that survey work should not be delayed through difficulty in obtaining forms, etc. quickly enough. An offset machine, possibly used in conjunction with an electrostatic means of preparing plates, is probably the most effective arrangement.

Administration

113. Nothing need be said here about administrative services as the functions and requirements are already well known. The administrative section would include personnel and pay, registry, stores, messenger and other services. It must be appreciated that the satisfactory conduct of these functions has a considerable bearing on the efficiency and morale of the statistical service as a whole.

Arrangement of substantive work

General

114. Reference has already been made in paragraph 64 to the need for maintaining a flexible internal structure to accommodate the gradual expansion of work and changes in the emphasis on individual subjects that might become necessary from time to time. Bearing this in mind, together with the fact that there must be some variation in statistical requirements

between countries, it is clear that only general remarks can be made here about the arrangement of substantive work. Nevertheless, we can attempt to examine some of the basic considerations that would be applicable at the early and later stages of statistical development.

Initial arrangement

115. The initial arrangement of statistical work is necessarily of an ad hoc nature, depending on immediate requirements and possibilities. One of the earliest tasks is always to assemble such data as are available from administrative sources and this is often done in conjunction with the production of a statistical bulletin. Apart from being a convenient summary of information and a useful document for many purposes, the bulletin helps to advertise the existence of a new statistical office.

116. It has already been seen that national accounts cover a large part of the information produced by a statistical programme. In the early stages, the available data is not sufficient for satisfactory completion of the accounts, but it is nevertheless important that an early start should be made on this work. In the first place, the exercise of compiling a crude set of accounts is a useful contribution towards an initial assessment of the economic situation and, secondly, the difficulties and information gaps encountered in preparing the accounts provide some guidance in formulating the future programme of work. However, great care is needed to ensure that preliminary national accounts and other estimates are not used in an improper manner and, in particular, they should not be published.

117. The economic and functional classification of central government accounts, gradually extended to cover those of local authorities and public boards and corporations, should be considered an immediate requirement because of its importance with respect to budget policy and general planning. It is also clearly urgent to build up information on the flows of funds for investment and on overseas balances.

118. Before the establishment of the statistical service, the processing of external trade statistics in most countries is carried out by the

customs department. This is a continuous task as the analysis is usually made on a monthly basis and involves a considerable amount of data. To ensure proper statistical treatment, it is usually found desirable for the statistical office to take over the work at an early stage.

119. A new statistical service cannot confine itself to readily available information and, almost from the outset, it has to begin to develop means of collecting data on its own account. Some of this information comes from larger productive enterprises and can be obtained by postal questionnaires, supported by a limited number of visits. The remainder is data obtained from households, small enterprises, markets and other sources with which contact can be made only through direct enumeration.

120. From the above it would seem that one possible arrangement of the substantive sections in a statistical office in the very early stages of development would be:

(1) National accounts.
(2) Public finance.
(3) External trade.
(4) Statistics of larger enterprises.
(5) Household statistics, retail prices, etc.
(6) Data from other administrative sources and preparation of statistical bulletin.

This is, of course, only one possible arrangement and it should be noted in particular that no mention has been made of population and social statistics. The only significant operation coming within this field in the early stages of statistical development is the population census. This has to be carried out by a separate ad hoc organization in view of the limited capacity of a new statistical office, but it is important that the office should be closely associated with the work.

Grouping of subjects at a later stage of development

121. The process of development from an initial stage of the type described above is, of course, dependent on the priorities given to the

various fields and this can vary greatly between countries. From a structural point of view we are therefore concerned more with the ultimate arrangement at which a statistical office should be aiming and this requires some examination of the statistical programme as a whole.

122. In paragraph 47 it was suggested that statistics should be considered under six main headings which were closely related to the actual situation and activities within a country. This was satisfactory when examining information requirements and uses, but the practical aspects of collecting the material also have to be borne in mind when dealing with the organization of a statistical programme. It is therefore necessary to reconsider the previous list from this point of view.

123. Under item (1) in paragraph 47, population statistics form part of the information on human resources, the principal features being the population census and civil registration. The statistical office normally has direct responsibility for a census which is one of the principal items in a statistical programme, but, in both cases, the actual work of collection is carried out by separate organizations, so that the office itself is concerned more with technical planning and processing. Under the same item, manpower includes information on employment and related subjects, while living conditions cover the economic aspects of household life as well as the relevant social factors such as education, health and housing. Information on manpower has to be obtained from direct enumeration, while current employment statistics are obtained from enterprises. Household economic activities also require direct investigation and information on social factors comes partly from household surveys and partly from the social services. It will therefore be seen that some separation of all these subjects is needed in organizing the collection of data.

124. Items (2) and (3) both relate to productive activity including services and can be considered together, since in both cases the information has to be obtained direct from the units concerned. However, these units include not only public and commercial enterprises, but also the households engaged in agriculture, handicrafts, etc. For purposes of collecting information

a distinction is needed between these two groups and it should further be noted that there is a strong possibility of obtaining information on household production in conjunction with other household data referred to in the last paragraph.

125. Public finance, balance of payments and external trade, covered under items (4) and (6), all stand alone as separate subjects so far as collection and processing of the data is concerned. Item (5), other financial statistics, includes banking and other operations not covered elsewhere. From the point of view of collection it is better that these subjects should be dealt with separately. However, there is a need for special attention to be given to the consolidation of financial information from all sources. This involves the capital transactions between the various sectors of the economy and the general financial status of the country and comes under the heading of financial flows and balances.

126. With these practical points in mind, an attempt is made below to group individual subjects in a manner which might correspond with the structure of a statistical organization at a later stage of development. The arrangement is necessarily a compromise between the nature of the subjects and the methods of data collection, so that many variations are possible. The subjects have been grouped in five divisions. No suggestions have been made concerning the allocation of work to sections within divisions, but it will be appreciated that, in some cases, sections would be able to deal with more than one subject.

- National accounts
- General economic and financial statistics
  - Capital formation
  - Public finance
  - Balance of payments
  - Money, banking and insurance
  - Financial flows and balances
- Population and social statistics
  - Demographic statistics

Employment
Education
Housing
Health
Other social statistics
External trade statistics
Statistics of enterprises, households and prices
Organized enterprises
Larger enterprises
Smaller enterprises
Household statistics (including both domestic and enterprise activities)
Wholesale and retail prices.

127. The list shows more detail than that considered in paragraph 47, but its coverage is the same. In any such list the selection of items for individual treatment must be dependent on the priorities attached to them and this is a matter which has to be decided by individual countries. The ultimate selection of items is dependent on the economic and social structure of the countries and eventually the various subjects are bound to find their own proper levels. A more important point is that the list is not and cannot be a watertight division of statistics into separate compartments because of the interdependence of the various activities within an economy. The subjects included under general economic and financial statistics have obvious relationships, not only between themselves, but also with those covered by other divisions. The various items of social statistics, which have been shown in the third division as particularly important indicators of living conditions and manpower availability, are also included under service enterprises and part of the data may be obtained from household statistics. If we continue adding to this account of the various connexions we only arrive, as in the second section of this paper, at the conclusion that a statistical programme is inescapably integrated. However, there is a danger of this basic fact being forgotten in the course of practical work and it cannot be denied that many

statisticians are working on particular subjects without having any understanding of the results they produce with respect to any over-all context. If this paper manages no more than to draw attention to this obvious deficiency, it will at least have achieved something useful. The difficulty can be partly overcome by means of staff meetings and the establishment of good working relationships in statistical offices, but it is also necessary that all professional staff should have a general understanding of national accounts and other means of co-ordinating data.

128. It should be noted that statistics of enterprises have been divided into three groups according to method of data collection. For the larger enterprises it is possible to obtain information mainly by postal questionnaire, while for the smaller ones direct enumeration is necessary. Purely household enterprises, such as small scale farming and handicrafts, need to be considered separately because the transactions relating to these activities are very closely linked with domestic transactions. Within the three groups, particularly the first two, information is collected on a type of industry basis and the work may involve other agencies as well as the central statistical office. For example, agricultural statistics are very often the responsibility of the Ministry of Agriculture.

Size of statistical organization

129. At the present time the size of statistical organizations is obviously dependent principally on the stage of their development, since the various methods of collecting and processing data, which can be applied in Africa, do not allow large variations in manpower utilization for each particular task. Many African countries have started their statistical work with a nucleus of not more than three or four professionals and perhaps 20 clerks and a few are aiming to build up their statistical organizations to a total of at least 20 professionals and around 500 executives and clerical level staff, with at least half of the latter continuously in the field. However, there can be no standard pattern in this respect, since not only are there differences between countries in financial and manpower resources, but there are also

considerable variations in statistical requirements. It is clearly necessary that there should be more highly developed statistical organizations in complex countries, e.g. those with several racial groups, large geographical distances, or a number of leading exports, than would be required in more simple countries.

130. To countries at an early stage of statistical development the idea of a data collecting and processing staff of more than 500 people may seem a little surprising, but this is the position in countries which have made reasonable progress towards achieving comprehensive statistics. Once an allocation of staff is made between the various regions of the country and between the various head office functions, it will be seen that the total number is not unreasonable. It has to be accepted that, at the moment, statistics in Africa are a fairly expensive commodity and this situation arises because so much of the information required can be obtained only through interview methods. However, if the cost is balanced against the savings which governments can effect by avoiding serious mistakes through the help of reasonably satisfactory information, it may be concluded that investment in statistics is a viable project.

131. The time will certainly come when improvements in literacy and the development of larger scale enterprises, particularly in agriculture, will make it possible to use more economical methods of collecting information, but the present situation is that Africa needs to know a great deal about itself very quickly if its hopes of rapid development are to be fulfilled.

Programme of work

Introduction

132. The review of information requirements in the second section of this paper was intended to give a broad idea of the desirable content of statistical programmes in relation to the basic economic and social situation in a country and this was modified in the following section to take account of the practical aspects of data collection. It now remains to show how the work in individual fields might be developed, bearing in mind the general aim of producing comprehensive and co-ordinated statistics.

133. The discussion which follows is arranged in the same order as the headings suggested in paragraph 126 as the possible grouping of subjects in a statistical service at a later stage of development. It is appreciated that the arrangement is a little different from that in Series M, No.31 and other documents and, as already indicated, this arises because we are concerned with the practical organization of work as well as with the content of statistical programmes. The principal differences are that production and personal income and conditions of living do not appear as separate headings, the various branches of industrial statistics are divided in the manner indicated in paragraph 128 and the subjects are arranged in a different order. There is, however, no major departure from internationally accepted recommendations with respect to definitions and methodology.

National accounts

134. National accounts statistics utilize data collected in connexion with other subjects and should therefore be regarded as a secondary stage of analysis rather than compilation of basic material. Their importance as a co-ordinating factor in statistical programmes has already been emphasized, although it has been shown that these accounts by no means cover all aspects of data requirements. They do, however, give a clear indication of some of the important links between the various statistical fields and can give useful

guidance in determining the priorities which should be attached to these fields. They are also one of the methods of obtaining a comprehensive view of a country's economy, which is essential for planning purposes. For these reasons it has been suggested that work on national accounts should start at a very early stage of development, even though the initial results may be crude.

135. With growing enthusiasm for the development of African countries on a co-operative basis, international comparability of data is becoming increasingly important and national accounts cover many of the items in respect of which comparisons have to be made. It is therefore necessary that it should be possible to compile accounts for all countries in a standard form and the UN System of National Accounts is probably the most suitable existing arrangement. In saying this, it is appreciated that the SNA is at present undergoing extensive revision. The preparation of accounts in conformity with the SNA does not, however, imply that all countries should confine their work to a rigid adherence to this system. It has already been shown that an extension of the system is required for any adequate analysis of production and it should further be noted that the use of the system as it stands presents some difficulty in Africa at the present time. In general, there can be no objection to countries introducing whatever extensions and modifications may be necessary to meet local requirements, provided it still remains possible to extract the items comprising the standard accounts and other supporting tables insofar as the information is available. The essential requirement is therefore simply the standardization of definitions and considerable manipulation of the accounts is possible without affecting the definitions in any way.

136. In some African countries the income approach has been used in much of the national accounts work so far undertaken because of the nature of the statistics available. It is only recently that efforts have been made to obtain more adequate information for commodity analysis of available resources and of the demands on them. Continued development of this analysis is clearly necessary if a satisfactory understanding of productive activity is to be achieved.

137. In extending the part of the accounts dealing with production, countries might first wish to concentrate on estimating the total inputs and outputs of intermediate products for each industry, leaving the details of inter-industry transactions to a later stage. This gradual development to a more complete input-output analysis would seem to be the best way of making the fullest use of available data and the rate at which the work can proceed is, of course, dependent on the speed with which it is possible to build up current statistics of enterprises of all types. It should be noted that in some cases, such as electric power, inputs can be allocated to final and intermediate consumers without much difficulty. The transition to a complete input-output table really consists in doing this for more and more items.

General economic and financial statistics

Capital formation

138. Capital formation aggregates form an important part of national accounts However, the subject has been singled out for separate treatment here because the structure of capital formation is one of the two main elements in African development plans and because information on the amount of capital formation actually achieved is an important check on the progress of plans. It should also be noted that it is often possible to obtain reasonably sensible figures on capital formation before other national accounts data become available.

139. The raw material for these estimates is obtained from both direct and indirect sources. The indirect sources are external trade statistics, statistics of domestic production of capital goods, and censuses and surveys of various sectors of the economy which have a bearing on capital formation although not dealing specifically with this topic. To the extent that these sources are used, the estimates of capital formation are essentially derived statistics, but they nevertheless constitute a useful initial approach.

140. The direct method of gathering data on capital formation is applicable to all types of units and the questionnaires used for this purpose will be further considered in connexion with industrial and household statistics. There is sometimes difficulty in obtaining accurate response to capital formation questions, particularly in cases where definitions used in company accounts differ from those in national accounts. Nevertheless, the direct method must be considered the principal source of information on this subject.

141. It should be noted that, in the case of the rural sector, direct enquiries are the only means of obtaining reasonably satisfactory information because much of the capital formation involves materials which are not paid for and extensive use is made of family labour. This information is usually accorded a lower priority than that relating to the organized sector.

142. The general position, therefore, is that, although indirect methods may have to be used in the earlier stages, the direct method of obtaining capital formation data should be introduced as soon as feasible. Nevertheless, even after this has been done, the indirect estimates may form a useful check on the results obtained.

Public finance

143. Public finance statistics relate basically to an amplification of the general government account of the national accounts. This account includes items relating to the productive activity in which the government may participate directly as an entrepreneur. While these items necessarily form part of the public accounts, it should be noted that the more detailed analysis of the production concerned is carried out in conjunction with that for private enterprises, although, as indicated previously, it is desirable that information on public enterprises should be shown separately for each industry.

144. Essentially two types of data may be extracted from the public budgets and accounts and these are, firstly, statements of revenue, expenditure, etc. according to the concepts used in the accounts themselves and, secondly, figures reclassified into the functional and economic categories of the UN Manual for Economic and Functional Classification of Government Transactions, ST/TAA/M/12. To permit a satisfactory reclassification along the lines of this manual some modification or amplification of existing government accounts may be required and it is possible that government budgeting periods may present special problems in this respect. It is therefore important that the work should be carried out in close co-operation with the ministry responsible for finance. An additional development, which should be considered for a later stage, is the classification of expenditure by commodity.

145. Both types of data should refer not only to central government, but to all levels of government and public boards and corporations. In the case of semi-public institutions there is usually some difficulty in deciding which should be included and the extension of the work to cover the entire public sector in detail is a fairly lengthy process which has to be undertaken step by step. Figures relating to central government alone are of considerable interest and these should be regarded as the essential starting point. However, the need for comprehensive figures, particularly for national accounts and similar purposes, should be borne in mind and early efforts need to be made to improve the coverage, even if all parts of the analysis are not initially in full detail. There is danger in concentrating too much on isolated sectors of special interest for development purposes, since this tends to detract from the comprehensive view of activities.

146. Statements of revenue and expenditure based on the conventional concepts of government accounts present no undue difficulty insofar as the consolidation of the figures for different levels and sectors of government is concerned. The compilation of these tables should be taken over by the statistical office as soon as possible, because not only are the figures useful in themselves, but the work is also related to that of reclassification.

147. The economic and functional reclassification of accounts involves a considerable amount of detailed work, although the requirements are fairly straightforward. It demands skill and experience on the part of the person who performs it and the first attempts at reclassification normally need to be carefully carried out by an expert. If there is no great change in the structure of the accounts and budgets from year to year, it is then possible to introduce a more or less automatic system of reclassification by means of a coding of the various items. This enables much of the subsequent work to be undertaken by clerical personnel. It is, however, important that operations should continue in co-operation with the ministry responsible for finance, since the purpose is not only to provide a basis for economic analysis and the minimization of costs, but also to ensure conformity with the legal provisions in respect of expenditure.

148. Work on the development of public accounts statistics calls for high priority because of its importance with respect to economic planning. Even when satisfactory procedures for analysis have been worked out, there still remains the difficulty of obtaining information on actual expenditures quickly enough to be useful.

Balance of payments

149. Requirements in respect of balance of payments statistics are already well known and most countries are following the recommendations of the IMF Balance of Payments Manual. The information is a reclassification of that covered by the rest of the world account in the national accounts. Balance of payments may be regarded as the second main element in African planning and statistics in this field are really a condition of the successful adoption of a more independent monetary policy.

150. Data on changes in holdings of gold and foreign exchange give a useful indication of relative inflationary pressures, but cannot be regarded as a satisfactory measure of the over-all current account balance of payments. For this purpose a reasonably comprehensive statement of payments is needed to complete the domestic economic picture and to furnish more information on the sources and uses of external finance. It is important that current account changes shown by such statements should be reconciled with movements in the reserves.

151. Balance of payments statistics have made considerable progress in most African countries and are fairly complete so far as the more easily recorded payments are concerned, but there is some difficulty in respect of the "invisible" items, including payments in respect of shipping services and earnings taken abroad by migrant labourers. Such items are of intrinsic interest. In countries with long land frontiers there is also the problem of unrecorded movements of goods, particularly where there are strong incentives for smuggling.

152. The development of a central bank usually has considerable influence on the quality of balance of payments statistics, since its operations make it very much easier to obtain properly classified records of overseas transactions. For many African countries there is still a special problem in this connexion because they share a central bank or currency board with a number of other countries. This question is referred to again below in the sub-section dealing with money and banking.

153. Another point, which relates to the balance of trade, is that trade statistics are compiled on the basis of goods arriving and departing during a given period, while the payments in respect of these goods may not all be made during the same period. There are also valuation problems, as in the case of diamonds which may be sold through an overseas marketing organization, where the actual value realized may not be known until some considerable time after exportation. The computation of the balance of trade has to be based on the trade statistics, but, because of these timing and valuation problems, considerable adjustment may be necessary. The adjustments are naturally dependent on the circumstances in particular countries and the methods and procedures adopted require very careful arrangement if the results are to be both reliable and consistent.

154. As a minimum, the items which ought to be covered in the early stages of developing balance of payments statistics are exports and imports, government transactions in services including interest payments, grants, loans and other capital transactions to which the government is a party

and changes in the gold holdings and in the foreign assets and liabilities of the monetary system. Having initiated the work on this basis, the aim should be the gradual extension of coverage and improvement in the quality of the figures. At a later stage it may be found helpful to undertake a census of all foreign assets and liabilities.

155. Good balance of payments figures call for very careful work on the part of a person who becomes skilled in the various operations through experience gained under the conditions prevailing in the country concerned. There is a close relationship with banking and other financial statistics and there are advantages in assigning both subjects to one section in the statistical office. Another arrangement which has been adopted in a number of countries is to make these subjects the responsibility of the central bank. This is practicable provided a close working liaison is maintained between the bank and the statistical office and, in this connexion, it is necessary to bear in mind that there is a strong link between these and other statistical subjects including the national accounts.

Money, banking and insurance

156. Statistics of money and banking are readily available since the institutions concerned, from their very nature, must keep complete records of all their operations. The problem is therefore to assemble the data and present it in a form which is useful for economic analysis. Unfortunately, this is not easy because of the complexity of the transactions involved.

157. The difficulty is further aggravated by the fact that many of the banking and related institutions in African countries are branches of overseas agencies. Not unnaturally, these institutions have been concerned with an analysis of their operational position on an individual basis, rather than in relation to that of the economy as a whole. The figures they produce, while highly accurate, are not always what is needed for general statistical purposes. It is only with the establishment of central banks that countries have begun to develop a more comprehensive analysis of their money and banking situation.

158. Particular problems arise in the case of overseas payments made by commercial enterprises, where it is often difficult to distinguish between capital and other transactions. In some countries better information is now available as a by-product of exchange control procedures. However, this does not obviate the need for proper statistical classification of all banking and similar transactions. The question is of particular relevance to balance of payments statistics.

159. Statistics of money and banking should be integrated with the national accounts by utilizing the information provided by the balance sheets of the various groups of credit institutions. Changes in assets and liabilities of these groups ought as far as possible to be classified according to the same principal sectors as those used in the national accounting system. It should be noted that the balance sheet data can be consolidated to form a balance sheet for the monetary system as a whole. This is useful as a guide to global inflationary tendencies and as a basis for the further analysis of the nature and uses of loans made by the credit institutions.

160. As suggested in paragraph 155 above, statistics of money and banking, together with those of balance of payments, might be placed under the care of the central bank, but it is of importance that their development should not take place in an isolated manner. If this were to happen, there would be a considerable risk of losing much of the essential co-ordination and consistency of the statistical programme. Such an arrangement should therefore be contemplated only in cases where the central bank can build up a strong statistical section which can work in close co-operation with the statistical office.

161. Insurance statistics, together with those relating to pension funds, are a rather specialized field which has perhaps not yet achieved great importance in Africa. When considered in the context of economic development and planning, they cannot be allotted a high priority. In any case, the data becomes available through administrative procedures and does not present any great problem.

Financial flows and balances

162. Information coming under the heading of financial flows and balances is intended to provide a comprehensive view of the capital transactions which take place between the various sectors of the economy and with the rest of the world, together with an over-all account of the financial status of each sector and of the economy as a whole. The information required with respect to flows is covered in broad terms by the various capital accounts of the SNA. These are the domestic capital formation account and the capital reconciliation accounts of households and private non-profit institutions, general government and the rest of the world. Much of the information is dealt with in this section of the paper and the last five sub-sections above are particularly relevant. Information on balances corresponds with that on flows, but, for this, it is necessary to know the total outstanding assets and liabilities at a particular point of time.

163. Comprehensive financial information is clearly of importance with respect to the implementation of development plans, but it is unlikely that African countries will have sufficient information to complete the capital reconciliation accounts of the SNA in the near future. Indeed, very few countries in the world have been able to complete these accounts satisfactorily

164. Finance for development in Africa is dependent on a relatively small number of sources of which the most important are the taxation of major local enterprises which are normally primary producers, indirect taxation, savings of enterprises and overseas loans and investment. Information on these items can be obtained without undue difficulty and together with records of local and overseas reserves of foreign exchange and other foreign assets can provide the basis for a simplified set of financial accounts.

165. However, it must be appreciated that provision has to be made for analysing a much more complicated system of capital payments, assets and liabilities in the future. No standard international publication is available for this purpose at the present time, but the subject is being considered as

part of the extension and revision of the SNA. Also, accounts on financial statistics have been under discussion in Europe and at a world level for some years. In the European Statistical Programme for Financial Transactions Accounts, Conference of European Statisticians WG.11/45, proposals are made for the sectors which should be covered by such accounts and the items which should be included in each sector. Comparability with the capital accounts of the SNA is maintained and the arrangement can therefore be considered an amplification of these accounts. While future requirements have to be borne in mind, it appears that it will be some time before African countries can embark on the compilation of very detailed data on financial flows and balances.

Population and social statistics

Demographic statistics

General

166. The human resources of a country are the factor upon which development prospects are principally dependent and human welfare is the main objective of development efforts. Information on population must therefore be regarded as one of the basic statistical requirements and this is, in fact, the view which has been adopted over the greater part of Africa. The principal subjects coming under demographic statistics are population censuses, civil registration and migration and manpower statistics.

167. Demographic statistics of all types are important in their own right and have many applications, but, from the point of view of statistical programming, it should be continuously borne in mind that they cover many of the basic factors in the economic and social setting for development efforts. These factors partly determine, on the one hand, the magnitude and character of the demand for goods and services and, on the other hand, the size and quality of the labour resources for producing these goods and services. They therefore have particular relevance to both the production and household sectors in the national accounts.

168. For long-term economic and social planning, demographic statistics are an essential basic element since they provide the means of making long-term projections. It is also necessary to bear in mind their more specific uses in regional and city planning and planning in the fields of education, manpower, etc.

Population censuses

169. Most African countries have carried out recent enquiries designed to establish the size of the population and its characteristics, but there has been considerable variation in methodology and in the quality of the work. Methods have ranged from "administrative" counts, which involve the collation of estimates for small sub-divisions of a country, to very much more elaborate operations involving complete population enumeration and supported by sample surveys. In some cases countries have run into difficulties through associating their census work too closely with the preparation of electoral rolls, but, in general, economic and social analysis has been the factor of primary interest. Even where census results have been crude, they have been of help in achieving a better understanding of the social and economic structure of countries, which is important not only because it is basic to plan formulation, but also because some modification of this structure is often necessary in establishing conditions suitable for development.

170. The minimum basic requirements from population censuses are decennial data on the distribution of the population according to area, sex, age and other selected socio-economic characteristics such as education, nationality and employment and occupational status. A population census is always a major undertaking which should be and normally is the responsibility of the statistical office. This is achieved by building up a demographic section within the office and this controls the planning of census operations. However, the magnitude of the work is such that it is necessary to employ large numbers of temporary staff whenever a census is undertaken. These include officials borrowed from other government departments and local authorities as well as school teachers. At a later stage of development, the field staff and branch offices of the statistical service provide the nucleus of the field organization for the census, but it is still necessary to use large numbers of temporary enumerators.

171. At the present time there is growing interest in the use of sample population surveys and it seems that, for many purposes, these can give more comprehensive and accurate information than the traditional method of complete enumeration. It is appreciated that, for some administrative purposes, there is a demand for figures relating to individual localities, but it is questionable whether this data should always be regarded as essential in view of the size of the organization needed to collect it and the consequent dependence on poorer quality enumerators. In the case of sample enquiries it is possible to use better staff and to train them more effectively, so that the range of information which can be obtained with satisfactory reliability is considerably increased. A compromise is, of course, possible by undertaking a very simple complete enumeration and using sampling for the more difficult questions, but this is still an expensive operation. When figures are needed for individual localities, it may be found that estimates of sufficient reliability for working purposes can be obtained by breaking down the area results from sample surveys on the basis of the administrative listings, which exist in almost every country and which could be developed with very limited cost. A further point is that arrangements involving a main census and a post-enumeration survey are not always very successful, particularly if there is a time lag between the two operations. Taking all these considerations into account, there seems to be a strong case for the increased use of sample population surveys under conditions where comprehensive planning is the primary objective.

172. There is one final point of some importance in relation to population censuses and this their usefulness as a basis for further enquiries. Apart from questions of cost and organization, the problem in African surveys is normally to devise a satisfactory sampling frame. Very often the most effective method is to make use of the division of the country into enumeration areas for population census purposes. For sampling it is necessary that enumeration areas should be even more accurately demarcated than in the case of a census and the principal improvement required is that they should be properly mapped and that their boundaries should be easily identifiable on the ground. The work involved is tedious, but not unduly expensive and the results can do much to improve the accuracy of surveys of all types.

Vital statistics

173. The need for civil registration arises mainly from the legal applications of the records, i.e. proof of identity, nationality and family status of the individual. The principal statistical requirements are information relating to mortality and fertility characteristics, which provide a tool for assessing changes in the size and structure of the population. The general position of work in this field is not very satisfactory, although many countries have rudimentary schemes of limited coverage. Much work is being done to develop more adequate recording of vital events, but it will clearly take many years for this to be achieved. Legislation which makes registration compulsory is clearly not sufficient on its own and the practical uses of birth, death and other certificates have to develop before people become very interested in acquiring them.

174. In the meantime there are two intermediate methods which can be used to overcome the lack of civil registration statistics. It is possible to concentrate on a sample of registration areas and the size of the sample can be gradually increased until full coverage is obtained. This arrangement enables very much more intensive efforts to be made to ensure full registration in the selected areas and produces results which can be statistically useful at an early stage. It is also enables some experimentation in adapting registration methods to local conditions and mistakes in this respect do not prove too costly.

175. The second method, which is often used in conjunction with the first, involves the use of retrospective surveys. These rely on memory of the events which occurred in a given period preceding the survey. A variation of this scheme is to make surveys of the same sample of households at two points of time with the object of recording changes which take place in the intervening period. The results of these surveys again help to provide information on vital events which would otherwise be lacking and they are also used to check the completeness of the records obtained through the permanent registration arrangements.

Migration statistics

176. Some idea of the general pattern of migratory movements, both external and internal, can usually be obtained from population census records. For more precise information on external migration during a given period, however, continuous recording is necessary. This presents no difficulty with respect to movements which take place at sea and air ports and recognized frontier posts, but, in countries with long land frontiers, there is a considerable amount of movement which escapes the official records. Much of this is usually of a seasonal nature, but it does also include permanent migration. For inter-censal population estimates, manpower and other purposes, it is necessary to have a good idea of external migration and no adequate solution has yet been found to the problem of unrecorded land movements. Most countries are not in a position to control the entire length of their frontiers, although some are approaching the stage where a check can be kept on the most important sections. Various types of special surveys have been tried and these have usually been concentrated on places where immigrants are known to pass or assemble. They do not, of course, give any indication of outward movements. Another possibility which seems more hopeful is to obtain information on migration in conjunction with other current surveys. This method has the advantage that it also enables coverage of internal migration, which is particularly important with respect to urbanization.

Manpower statistics

177. While most African countries have made considerable progress in employment statistics, the more general question of manpower enquiries has not received so much attention. A great deal of useful data on manpower availability can be obtained from population census and other records, but current manpower statistics usually require special enquiries of a rather extensive nature. Very few countries have so far developed such enquiries on a regular basis and it seems unlikely that many will be able to do so in the near future. The most practicable aim therefore seems to be the collection of a limited amount of manpower information in conjunction with other enquiries whose general design may be suitable for the purpose. A further possibility would be to introduce manpower surveys as special enquiries taken at mid-points between population censuses.

Employment

178. Reference was made to manpower in the sub-section dealing with demographic statistics because data in this respect comes from population censuses and household surveys. Employment statistics are derived from a different unit of investigation, which is normally the establishment, and are therefore dealt with separately.

179. Labour is a key resource in production. The quantity of goods and services produced reflects the amount of labour employed, i.e. number of persons and length of time worked and its productivity in terms of average output per man-hour. Although the labour supply may be ample, the production of many less industrialized countries is low because of under-employment and low productivity. Efforts to improve this situation include inducements for labour to shift from agriculture to industry, optimization of capital-labour input ratios, training, and improvement of working and employment conditions. The last named item requires particular attention because wages and salaries are also an important element in the cost of production.

180. The basic requirements with respect to labour statistics are series showing employment, earnings and hours of work. Earnings data by industry and size of establishment are needed for the development of wage policies, while information on hours of work is a useful economic indicator, as well as forming the basis for productivity estimates. Additional information needed for the establishment of wage and manpower policies, social security programmes, etc. includes wage rates, supplementary benefits and related data and a classification of all information by occupation, sex and skill level for each industry.

181. It has to be appreciated that this type of information is important for economic analysis in addition to providing the background for labour policy. Payments for the hire of labour form a large part of the total value added, while earnings and their distribution are relevant to the household sector and the total demand for goods and services. Much of the other employment data, together with additional information relating to establishments

and enterprises, serves to throw more light for economic policymakers on the manpower resources and the structure of the economy. To ensure that the fullest possible use can be made of all available data it is essential that the same basic classifications should be used in all branches of statistical work. In the case of employment statistics these are the industrial and occupational classifications and in both cases the standard international publications give useful guidance.

182. Another important but more specialized item coming under employment statistics is industrial injuries, including their causes and effects, frequency and severity, by industry or type of activity and by occupation. This data comes from a number of sources and is particularly important in activities such as mining and construction where accident rates are high.

183. Fairly good progress in developing employment and related statistics has been made in most African countries and it should be noted that, in achieving this, close co-operation between the ministry responsible for labour and the statistical office is always necessary. The labour ministry may be in a better position to obtain information on some items such as wage rates, hours of work and injuries, while the statistical office usually has a more suitable organization for handling questionnaires relating to the basic figures on employment, earnings, etc. which are of more general economic interest. However the work is divided, it is important that all aspects should be properly co-ordinated.

184. The basic information which, as suggested above, is more appropriately the responsibility of the statistical office, is normally obtained by means of a postal questionnaire directed to establishments, with the operation supported by a limited number of visits to ensure adequate response and to settle major queries. In the early stages of development the objective should be an annual survey of this type. Later on it is necessary to introduce quarterly or monthly enquiries to indicate changes in employment due to economic fluctuations and to show whether planning is succeeding in providing jobs. The most satisfactory arrangement is for the annual survey

to have fairly wide coverage and some countries attempt to include all establishments employing more than five persons. It should also include a reasonably comprehensive range of questions. The quarterly or monthly surveys should be much simpler and be confined either to the larger establishments, or to a sample having the same coverage as the annual survey. Their objective is to measure changes in the level of employment and earnings which have taken place in the various industries since the previous annual survey and there is some possibility of linking these enquiries with the collection of data for an index of industrial production.

185. While the despatch of questionnaires presents no undue difficulty, it is always a very tedious process to get them back again properly completed. Some employers may be reluctant to furnish information, but the more general problem is misunderstanding of the objectives and content of the questionnaires. There is a limit to the amount of correspondence and number of visits which can be undertaken by a statistical office to clear these difficulties and, in cases where the problem is serious, even more use may have to be made of sampling than suggested in the last paragraph, particularly with respect to the smaller establishments in the annual survey.

186. The above comments omit consideration of some important questions and, of these, the most essential is the compilation of a list of enterprises and establishments. Without such a list and the necessary arrangements for keeping it up-to-date on a regular basis, no results of enquiries involving these units can be considered satisfactory because there is no adequate means of assessing the completeness of coverage or of making satisfactory sampling arrangements. This is a basic problem which, in the absence of effective legal registration of establishments, is probably the major factor hindering the development of employment, production and distribution statistics. It is considered in more detail in the sub-section dealing with larger enterprises.

187. Another outstanding problem relates to the very small enterprises not covered by the surveys referred to above. Information on household enterprises and on much of the activity arising from self-employment will, of course, be obtained from household surveys, but there is still a group of small enterprises which have to be considered a part of the organized sector and which are covered neither by establishment nor household enquiries. In African countries which have a tradition in the field of handicrafts this group may be very important. So far as employment statistics are concerned, however, it cannot be expected that very frequent enquiries will be practicable. Population census data has to be regarded as the basic information in this respect and current estimates have to be derived from information collected as part of periodic surveys of this type of production. Further consideration is given to this question in connexion with production statistics.

188. Finally, there is the question of unemployment statistics, which presents particular problems in Africa because it is not always easy to define unemployment. Registration of persons looking for work in urban areas is fairly straightforward and is a function of the ministry responsible for labour, while surplus manpower in the rural areas is normally at least partly absorbed in family farming and other activities. The principal unemployment problems in Africa at the present time relate to the urban areas. Very often, unsatisfactory rural conditions and efforts in respect of urban development have attracted young people to the towns more rapidly than they can be absorbed in employment. Such problems indicate a basic economic imbalance and have to be considered in the over-all context of planning.

Education

189. In education at present, it is more important to compile better statistics than to collect more data. Information on educational activities, whether carried out by private or public institutions, can be obtained relatively easily in most African countries and is very often processed, but, in general, it is not put in the form necessary for modern techniques of educational and

manpower planning. There are two exceptions to this sufficiency of data. Higher education is often badly documented, particularly for students studying outside Africa, and technical training of all types not coming under direct governmental control, is often unknown or statistically unrecorded. Both these areas are vital for economic planning and steps should be taken to collect this information, or to co-ordinate its reporting through one central body.

190. The required capacity of the various branches of the educational system is assessed on the basis of population statistics and projections and estimated manpower requirements, while current statistics of educational activities are needed both for ensuring the efficient organization of the work and to show the results of education with respect to manpower availability.

191. Population statistics which are particularly relevant are age, sex and area distributions and the projections of these figures. It should also be noted that population censuses and surveys normally aim to give some indication of the "stock" of trained manpower, although questions on educational level are necessarily very brief and there is some doubt about the accuracy of the answers obtained. Level of education statistics are often non-comparable because of differences in school grading systems and in the questions asked, e.g. level reached and level completed. Also, there is often practical difficulty in determining these levels with any accuracy; the number of years of schooling is often a better indication. Literacy data obtained from censuses and surveys are also frequently unreliable for development purposes and it would be more useful to know the level of literacy in the language used in government and business. A further complication may arise from the existence of religious and other schools which do not follow the normal educational pattern.

192. In compiling school data, the first need is to express it in an intelligible form and some of the points which might be taken into consideration are as follows. It is helpful to express enrolments at each level as a percentage of the relevant age group. Teacher-pupil ratios should be computed, as they give a good indication of the adequacy of educational arrangements. Rates

of repetition of particular levels of training should be shown and the average age for each level and the percentage of pupils above this average should be calculated. These items give indications of performance which are not shown by examination results. Financial data, especially costs per student at various levels, should be expressed not only as national averages, but in ways showing regional and inter-school variations. Examination results at the major levels should be given. It is important that regional variations in respect of all items should be made clear.

193. Whenever possible, continuous series are needed. For enrolments, these may be prepared at annual or longer intervals in order to show the comparative rates of expansion. For examination results, cumulative totals are preferable to indicate changes in the stock of educated persons. It should be noted that educational expenditure is regarded as current outlay in national accounts, but it has been suggested that, in Africa, it might be more correct to regard it as a form of capital formation because its principal objective is to increase the stock of educated people. This has some implications with respect to the general outlook on development planning, which is still somewhat biased towards fixed capital formation.

194. Some countries are considering the establishment of registers of higher-level manpower, which would cover all persons attaining school certificate and higher educational levels and those with special technical qualifications. The exact nature of the information required in respect of each individual and the type of register which should be maintained is dependent on the particular conditions in a country and on its aims with respect to economic and manpower development. Shortage of higher-level manpower is a general characteristic of African countries and some form of register providing detailed and comprehensive information on available supplies at short notice can not only form a useful basis for employment policy, but also provides a list of the people available for various jobs.

Housing

195. The production of more adequate housing is one of the urgent social and economic problems in Africa and countries are anxious to establish effective programmes in this respect. The general position is that urban dwellings are overcrowded in all countries and great numbers of urban and rural structures are dilapidated. The increasing rate of urbanization is probably the most important factor tending to cause a further deterioration in the situation. While housing needs have to be considered within the over-all context of priorities in development planning, their importance should not be disregarded.

196. For planning purposes it is necessary to undertake periodic reviews of the housing situation, to have the data needed for assessing housing requirements, and current statistics of building and obsolescence to show the extent to which these requirements are being met. It is also necessary to take into account various demographic, social and economic factors which have a bearing on housing conditions.

197. The periodic reviews of the housing stock and its occupants are usually based on information collected in a housing census carried out with a population census, in housing sample surveys, or in sample surveys primarily concerned with other topics. However, very few countries have so far been able to undertake housing enquiries as separate operations. The desirable information is the type of housing unit and owner, occupancy in terms of persons and households, the type of tenure enjoyed by the occupants, the size of the unit, its water and toilet facilities and its location. Useful additional information would be the structural materials of walls and roof and the availability of electricity. It is appreciated, however, that countries would not be able to collect all this data in the early stages and that, initially, it would be necessary to aim at the simplest type of over-all count to ascertain the stock of occupied and unoccupied dwellings, the density per room and possibly the distance from water supplies. In urban areas, sampling might be used to obtain information on the quality of

housing, but this factor would not be so important with respect to traditional rural dwellings. The internationally agreed definitions of housing concepts and terminology are given in General Principles for a Housing Census, ST/STAT/SER. M/28 and, to ensure consistency and comparability, it is desirable that these should be used as far as possible in all housing enquiries. It should be noted, however, that difficulty has been found in applying these recommendations under African conditions and further research is necessary. Efforts are being made to revise the Principles in time for the 1970 World Census Programme.

198. In the earlier stages of statistical development, information collected on housing needs to be as simple as possible and dwellings can be conveniently classified by type according to degree of permanency. The types of owners which need to be distinguished are government, local authorities, commercial enterprises and personal, the latter being divided between owner-occupiers and others. The number of habitable rooms is a sufficient indication of the size of the dwelling and, for geographical location, a division of the records by region, plus a distinction between urban and rural areas, is probably adequate.

199. The background data needed for assessing housing requirements are population statistics and projections aimed particularly at showing the probable growth in the number of households. In this connexion it should be noted that estimates relating to households should not be based on the groups of people actually occupying dwelling units, since the composition of these groups is naturally distorted by current housing shortages. It is necessary to use the internationally agreed definitions of the various types of household if satisfactory estimates are to be achieved for housing programmes. A knowledge of internal migratory movements is of importance in making these estimates and, in particular, it is necessary to know the rate at which people are moving into urban areas. This factor is one which has to be kept constantly in mind in many aspects of development planning and plans usually envisage some degree of control over the amount of movement which takes place.

200. There is, as yet, no internationally agreed programme for current housing statistics, but it is clearly necessary that the data should be compatible with that collected for the periodic reviews. Current data with respect to dwellings in which government, local authorities and commercial enterprises are the investors, presents no undue difficulty. Information on housing planned by personal owners in urban areas can be obtained through local authority building licences and sometimes completion records are also available. The same sources may provide some information on obsolescence, although this may not be so reliable. For rural areas, current housing statistics are not easy to obtain because much of the work is carried out by family labour. Rural housing usually conforms very closely to traditional patterns and the desirability of maintaining these patterns or effecting improvements is largely a social problem. This is, of course, a slightly different question from the need for providing better sanitary, water and other facilities in rural areas.

201. It will be appreciated that housing needs, especially in urban areas, are partly dependent on internal population movements, which are affected by changes in the pattern of economic activity and other factors. It should also be noted that where development involves the establishment of industrial estates or urban suburbs, a completely new pattern of housing may have to be evolved and statistical surveys of the existing situation may be of limited use except insofar as they concern total number of persons, household structure, etc. There is therefore a need to regard housing statistics in a rather flexible manner and to adapt the arrangements for collection and processing to current objectives which may be changing fairly rapidly.

Health

202. Health is another factor influencing social welfare, manpower availability and population growth, and health planning is a field of development in which African countries are taking an active interest. Nevertheless, health statistics in most countries have been very little developed. Four aspects of the subject can be distinguished for the purpose of classifying information

and these are: Mortality, morbidity, health personnel and institutions and the operations of health services. Morbidity and health service operations are, of course, closely related in that the latter provide much of the available information on morbidity. One of the most important aspects of health statistics in general lies in the need for tracing the decline of the communicable diseases, especially those of childhood. It is therefore necessary to have details by age and sex and to establish series which will show the trend over time.

203. Mortality statistics relate to the number of deaths classified by sex, age and cause. Figures may be available in some countries for urban areas, but, in general, records are neither reliable nor complete. Comprehensive data is dependent on the development of registration schemes of the types described in paragraphs 173-175 and this will be a fairly lengthy process, even in countries which give it high priority. It is usually found necessary to concentrate firstly on recording the fact of death and to extend the coverage of information on causes more gradually. Medical opinions are necessary for satisfactory information in this respect, although it is possible to use a very much simplified list of causes which does not call for qualified examination.

204. The two principal sources of morbidity information are treatment and other administrative records on the one hand and direct surveys on the other. In the first group, records of hospital and other health centre treatment probably have to be regarded as the basic information. In addition, some communicable diseases may be legally notifiable, while certain others, such as cancer and leprosy, may involve registration. Road accident statistics present no great difficulty and there are also the industrial accidents and diseases to which reference was made in paragraph 182. The direct enquiries include mass diagnostic and screening surveys carried out in areas with particular health problems and sickness surveys which make it possible to take a more general view of the health position in limited areas. Although a number of African population censuses have included questions on disability

these can hardly be regarded as a satisfactory source of health information. It has to be expected that it will not be possible in the future to carry out sickness and diagnostic surveys on a large enough scale to provide comprehensive information. Morbidity statistics will therefore remain largely dependent on making the fullest use of information from all possible sources.

205. Information on health personnel and institutions can be obtained readily and requirements in this respect need no amplification here. This information also includes data on capital formation and current expenditure in relation to health services. Following the comment in paragraph 193, it could perhaps be suggested that expenditure on health services might be regarded as a kind of capital maintenance.

206. Statistics of the operation of health services are needed not only to provide morbidity information as indicated above, but also to assist in the organization and development of these services. An analysis of hospital records in respect of both in-patients and out-patients should be the initial objective and efforts should be made to extend the coverage to dispensaries and other health centres as soon as possible. The primary requirement appears to be improvement and standardization of all types of treatment records. There are many difficulties of a purely administrative nature and their elimination can do much to improve the situation. For example, out-patients are often issued with new registration cards at second and subsequent visits, which not only makes it difficult to estimate the number treated, but also detracts from the continuity of case histories.

Other social statistics

207. Other operations commonly included under the heading of social statistics are food consumption and nutrition surveys, the so-called socio-economic surveys and household budget enquiries. These provide much information for the assessment of levels of living and for planning social improvements, but they also have implications in a much broader economic context. They are, in any case, a part of general household statistics and any attempt to

consider them separately could lead only to confusion with respect to the practical aspects of organizing field survey programmes. Such enquiries are therefore considered briefly in the sub-section of this paper dealing with household statistics.

External trade statistics

208. External trade data is probably the most important type of statistical information needed in Africa for economic planning purposes. By measuring the flow of goods at one crucial point, trade statistics provide a good deal of insight into the levels of capital formation, the levels and structure of consumption, the scale and composition of industrial activity, technical changes in agriculture and output of cash crops. The place of such data within the general statistical framework can be seen clearly in the diagrams in Annex III and it should be noted that the flows of payments connected with external trade are usually among the most significant in the whole system.

209. African countries have to earn the bulk of the foreign currency required for the importation of capital and other goods essential to development through the export of relatively few commodities which are mainly of a primary or semi-finished nature. World market fluctuations with respect to these commodities have important implications for development prospects and for internal stability. Schemes for stabilizing producer prices, sales price policy, the availability of new markets and the possibilities of diversifying the character of experts, are factors which have to be considered in this connexion. Statistics of the quantity and value of exports, classified by kind of commodity and country, form an important part of the data needed. Similar series in respect of imports are required in formulating measures for the conservation of foreign exchange. In all questions relating to trade it is important to take account of the effects of fluctuating and multiple exchange rates.

210. Value and quantity series for exports and imports also provide the basis for calculating index numbers on quantum and unit values. Unit value indices indicate changes in the terms of trade and the two types of index together provide summary information for dealing with questions concerning inter-relations between volumes and unit values in external trade and between foreign and domestic economic conditions. For these purposes, economically significant classifications other than the Standard International Trade Classification are needed. Price series for exports and imports are required in addition to the index numbers.

211. For an extended national accounts analysis of the type indicated in Annex III, it is necessary to have an industrial breakdown of both imports and exports and a division of imports between inputs and final products. It is desirable that the latter should be extended to form a more complete end-use classification, since this has important applications apart from its use in index numbers and national accounts. A classification of commodities by industrial origin is given in Relationship of the Standard International Trade Classification to the International Standard Industrial Classification, E/CN.3/307.

212. The preparation of external trade series is usually one of the first statistical operations undertaken by countries, because the need for the data is readily appreciated and information is available from the customs records at ports and frontier posts. Very often the work has been carried out by the customs department for a long time before the creation of a statistical office. It is, nevertheless, desirable that it should be transferred to the statistical office at an early stage to ensure adequate statistical treatment of the data. It may also be borne in mind that, because trade data usually calls for bulk processing equipment, its early presence in the statistical office can lead to the speedier mechanization of other work.

213. Nearly all African countries are processing their trade statistics in accordance with the Standard International Trade Classification or the Brussells Tariff Nomenclature and those which are not doing so are considering conversion. However, there is still room for improvement in all countries, particularly those with long land frontiers over which goods are passing unrecorded.

Statistics of enterprises, households and prices

General arrangements for the collection of data

214. In discussing the development of a statistical programme, an attempt has been made to arrange the various components in a way which might prove convenient in a statistical office and, as already explained, this involves a compromise between the nature of the subjects and the methods of data collection. For the topics so far considered, the nature of the subjects has been the predominant factor, but the position is a little different with respect to statistics of enterprises, for which it is necessary to take the methods of collection more closely into account.

215. Broadly, all enterprises can be classified in the following three groups:

(1) Larger enterprises which keep accounts and which can supply information by means of postal questionnaires provided there is support from limited field operations to deal with more difficult cases. It is possible to maintain a list of such enterprises to serve as the basis for investigations.

(2) Smaller enterprises which do not normally keep adequate accounts and which have to be investigated by direct enumeration. These are mainly small manufacturing, trading and service enterprises. They occur in fairly large numbers and are relatively unstable, so that it is not practicable to maintain an up-to-date register.

(3) Enterprises which are very closely linked with household domestic activities. These include a large proportion of African agriculture, as well as handicrafts, trading, etc. They also have to be investigated by direct enumeration and there is, of course, no possibility of maintaining a register.

216. The first two groups constitute what can be called, for want of a better term, the "organized" enterprises. Information relating to

them has to be collected by means of special enquiries dealing specifically with enterprise activities. For the household enterprises which form the third group, the situation is different in that enterprise and domestic activities are often dealt with in the same enquiry.

217. For comprehensive statistics of enterprises, all three groups have to be covered and it is necessary to have definitions which enable individual enterprises to be allocated to one of the three groups. Such definitions are necessarily of an arbitrary nature and depend on conditions in individual countries.

218. The coverage of existing industrial statistics is normally determined by the size of enterprises, the usual measurement being the number of persons employed. This is the easiest method of distinguishing between groups (1) and (2) above and, although far from perfect, is probably the most suitable for practical work.

219. Group (3) consists of enterprises which are closely linked with households and this is the principal factor separating these enterprises from those in group (2). Any small enterprise which can be identified as a separate entity comes within group (2) and the remainder are household concerns in group (3).

220. It therefore appears that the two criteria, size of enterprise and, for small enterprises, whether or not integrated with domestic activities, can be used as a means of distinguishing the three groups suggested above. These groups are, of course, of a very broad nature and need further subdivision for practical purposes, particularly with respect to the distinction between different types of industrial activity. It should also be noted that most of the "household" enterprises are found in rural areas, while small concerns in urban areas are usually independent of domestic activities, which is a further factor assisting the classification.

221. In Annex III an example is given of how the production sector may be divided in the way indicated above and this may serve to give some further clarification of the classification. For simplicity, the industrial breakdown which would be applicable to each of the three groups has been omitted.

222. The following paragraphs deal firstly with information requirements in respect of enterprises and then with the collection of data on "organized" enterprises. This is followed by notes on household investigations. The section also includes some notes on wholesale and retail prices, which have been included here because they are more closely related to enterprise activities than to other aspects of the statistical programme.

Information requirements in respect of enterprises

223. Enterprises should be considered under the divisions of the International Standard Industrial Classification, which are:

(0) Agriculture, forestry, hunting and fishing
(1) Mining and quarrying
(2-3) Manufacturing
(4) Construction
(5) Electricity, gas, water and sanitary services
(6) Commerce
(7) Transport, storage and communication.

224. Some of the publications which present recommendations for the collection of statistics in these fields are:

(0) Methods of Collecting Current Agricultural Statistics, FAO 1955
(1-5) International Recommendations in Basic Industrial Statistics, Series M. No.17, Rev.1
(6) International Recommendations in Statistics of Distribution, Series M. No.26.

A summary of the recommendations, limited to basic requirements, is given in Statistical Series for the Use of Less Developed Countries, Series M, No.31.

225. For larger organized enterprises which keep accounts, fairly detailed information can be obtained, while, for the smaller ones, the items requested have to be much more limited. When household enterprises are investigated in conjunction with domestic activities, fairly long

recording periods are usual, which again provides the possibility of detailed information. However, irrespective of the amount of detail, it is necessary that questionnaires should be arranged so that data on transactions are, as far as possible, consistent with the national accounts system adopted for over-all economic analysis. It is then possible to present a broad account covering all types of production in a standardized manner, which is essential for formulating comprehensive development plans and for assessing the probable over-all effects of development efforts.

226. Nevertheless, it must be borne in mind that there are wide differences between the various branches of production and that a great deal of additional specialized information is needed for planning in the individual fields.

227. In the case of agriculture and related activities, periodic reviews have to be made of the size, number and nature of holdings and their utilization, and of numbers of trees, etc. and livestock, while current information is needed on areas sown and harvested and on yield and production of key field and tree crops, as well as on livestock slaughterings. In addition, for many agricultural products, production forecasts are important in connexion with price and trade policy. For forestry, periodic forest inventories are needed, plus current statistics of the volume of timber removals. The items of interest with respect to fisheries are the vessels and other equipment used, fish hatcheries and the size of sea and inland catches.

228. For industrial groups 1 - 5, a good account is needed of the structure of the industries in terms of the number and size of establishments, employment, capacity of equipment, etc. Sufficient data is needed on the use of basic inputs for the calculation of technical coefficients and a reasonably good knowledge of the composition of the value added is required. Quantitative information on production and capital formation is, of course, essential.

229. Commercial activities cover the full range of industrial production and an industrial breakdown of transactions is therefore necessary. Gross margins on distribution are one of the essential factors and it is important that questionnaires should be designed to show this information clearly.

230. For transport and communications, which also include warehousing, specialized information includes details of water, rail, air and road transport facilities and current data on the carriage of passengers and goods. In some countries transport by pipe-lines and cableways is also important and the operations of postal, telegraph and broadcasting systems should not be neglected. Many of the problems of development in the fields of transport and communications call for specialized investigation.

231. In spite of the differences in information requirements noted above, it should be borne in mind that the basic arrangements for the collection of data are very much the same for all industries.

Statistics of organized enterprises

Larger enterprises

232. In most countries, work on the collection of statistics of organized enterprises is usually started in a rather piecemeal fashion by dealing first with the larger units and then gradually extending the coverage. Sometimes initial work is limited to a few of the major industrial groups, while distribution and services, in particular, are generally given low priority. In some cases, such as mining and parts of the transport industry, good results can be obtained quickly because there is no difficulty in achieving fairly complete coverage, but in others, where there are many smaller enterprises, not only is coverage incomplete, but the extent of its incompleteness is unknown.

233. There is much to be said for the above approach in that it does provide some information fairly quickly and cheaply where none existed before. However, it cannot be considered satisfactory as a permanent

arrangement and, sooner or later, countries reach the stage where they decide that they must have a reasonably complete list of the larger organized enterprises, divided on an establishment basis. In most African countries legal registration and licensing is not sufficiently well developed to provide the information needed and the only way of obtaining it is through a special census. As this is a large scale operation, it is important that the opportunity should be taken of recording establishments in all industries, but the coverage within individual industries is dependent on local conditions. In this connexion the difference between groups (1) and (2) in paragraph 215 should be noted. For the larger enterprises, the census forms the basis of a permanent register which can be kept continuously up-to-date, while, if the smaller concerns are numerous and relatively unstable, it may not be practicable to maintain a register. Nevertheless, the latter group should be included in the census if at all possible because the results give useful information on the structure of industry at a point of time. No general recommendations can be made on this question, since, as indicated above, the situation is very much dependent on local conditions and a large variety of different arrangements are possible.

234. If it is assumed that, after taking a census, most countries will wish to maintain a register of establishments above a given size, the most difficult problem is in keeping the register up-to-date. Countries clearly cannot afford to take a new census at frequent intervals and, in the absence of effective legal registration, some other method has to be found. One possibility seems to be through the use of the field organization of the statistical service. It was noted in paragraph 98 that branch statistical offices would normally be established after some progress in statistical development and that field staff would be attached to these offices on a regional basis. While enumerators would be employed on enquiries at household and similar levels, their supervisors, who would operate on a more mobile basis, would also have responsibility for interviews at higher levels, e.g. commercial firms and local authorities. In the course of their travels these people

would have the opportunity of becoming closely acquainted with their own districts and they would be in a position to note the existence of new establishments and the liquidation of old ones. Reporting of these events in a systematic manner should form part of their duties with a view to keeping the list of establishments up-to-date. In addition, the fullest use should be made of other sources of information, such as labour inspection reports, and the eventual aim should be to introduce proper legal registration of all establishments.

235. At the time of a census of establishments, certain basic information is obtained about their nature and size. This forms the structural background to the current statistics which are collected at more frequent intervals. The essential items for each establishment are its industrial classification, number of employees and capacity of installed power equipment. These are important as stratifying factors for sampling purposes. Other information may, of course, be collected during a census, but it should be remembered that questionnaires need to be very simple if the cost of the operation and recording errors are to be kept within reasonable limits.

236. Having compiled a good list of establishments, it remains necessary to arrange the collection of data on a regular basis. The information discussed in paragraphs 223 - 231 is normally required annually, although distribution and services may be given a low priority. The extent to which this objective can be achieved depends almost entirely on the capacity of the statistical service to carry out follow-up operations in respect of questionnaires where the response is unsatisfactory. The despatch of questionnaires by postal or other means is no great problem. Difficulties arising from reluctance to give information can usually be overcome fairly quickly and the principal trouble arises from misunderstanding of questionnaires and lack of adequate records in the establishments themselves.

237. As suggested in paragraph 234, the most suitable people to carry out follow-up operations are the executive members of the field organization, but, in the case of some larger firms, professional staff may also have to participate. The need for personal visits, as well as the quantity of material to be processed, can be greatly reduced by the use of proper sampling arrangements. The general requirement is a sample for each major industrial group, stratified according to size of establishment. It is usually necessary to include all the large establishments, but smaller sampling fractions can be used in respect of the remainder.

238. If these arrangements do not bring the work within the capacity of the statistical service to ensure adequate response, further means of reducing the number of establishments investigated at any one time have to be introduced. This necessarily means a reduction in coverage of the annual statistics, which is usually effected by adopting a higher size limit in respect of the establishments to be included. This, of course, has a bearing on the definition used in distinguishing between groups (1) and (2) in paragraph 215. The method of dealing with those in group (2) is referred to briefly in the next sub-section.

239. It is desirable for annual statistics to relate to calendar years, but it should be borne in mind that the ability of business firms to co-operate in this respect depends to some extent on their accounting periods. Differences in accounting years may lead to staggering of data collection operations, which has some advantages with respect to the flow of work in the statistical office, but gives rise to difficulties in amalgamating the data. Problems relating to agricultural enterprises are probably the most significant in this respect, since a useful analysis of their operations must necessarily be related to complete harvesting periods.

240. In addition to annual statistics, more frequent information is required in the case of some industries, particularly manufacturing, construction and agriculture. In the case of the first two, this arises from the need to keep a constant watch on changes in the level of activity,

while, for some agricultural products, crop forecasts may be important. In all these intermediate surveys it is usually better to base the records on differences as compared with the previous annual survey, rather than to use samples which are designed to provide independent estimates of aggregates. It is in any case necessary that the sample size should be smaller than that in the annual enquiries and questionnaires have to be very much simpler. Probably the best arrangement is to use a sub-sample from the previous annual survey, possibly limited to the larger establishments and it should be noted that adjustments may be necessary for differences in time coverage. In the case of crop forecasts the position is a little different in that the records have to be based on expectations as compared with the previous year's actual crop.

241. One final point, which should be mentioned in connexion with the statistical operations discussed above, relates to employment. This has already been discussed as a separate subject and is treated as such in many countries. Nevertheless, it does involve the same methods of information collection as those just considered and the industrial statistics of organized enterprises do contain employment data. Consideration should therefore be given to the possibility of dealing with all requirements for information about employment in the questionnaires relating to industrial activities. One objection raised in this connexion is that the accounting records of establishments which form parts of large enterprises are sometimes centralized in the head office, while the employment records are not. This problem could be avoided by a simple adjustment in the records maintained by the firms and it should not be too difficult to secure their assistance in this respect, particularly as the result would be a reduction in the number of questionnaires to be completed.

Smaller enterprises

242. The enterprises considered here are those coming within the second group described in paragraph 215. Records of their activities have to be obtained by direct enumeration because they do not keep satisfactory

accounts and it is not possible to maintain a register to serve as a sampling frame because of the large number of establishments involved and frequent changes. As already indicated in paragraph 225 the information collected has to be much simpler, but, nevertheless, this should be arranged to meet the national accounts requirements as far as possible.

243. The smaller enterprises would normally be included in an industrial census, but it should be noted that the information obtained contributes only to a knowledge of the structure of industry and other means have to be used in drawing samples for current statistics. The most suitable arrangement is normally an area sample and the frequency with which investigations can be made depends on the resources of the statistical office. It is also often necessary to introduce coverage limitations such as the omission of distributive enterprises.

Household statistics

Coverage and information requirements

244. Household statistics are dealt with in rather more detail than the other topics covered by this paper because, although their importance is fully appreciated, little has been said in other documents about arrangements for incorporating them in comprehensive statistical programmes. The position is illustrated by the presentation adopted in national accounts statistics, which is considered in more detail in Annex III and which shows that households have two distinct functions. Firstly, they are the units which consist of private consumers and the labour force. Secondly, they are responsible for the enterprise activities which are closely related to the household sector.

245. It should be noted that, in Africa and other similar areas, particular attention has to be paid to the entrepreneurial functions of households. This position will change with the development of organized enterprises, but, for the present, statistical investigations have to be adapted to the existing situation.

246. For national accounts purposes, households are grouped with private non-profit institutions and the savings and depreciation of household enterprises are not normally shown separately since these items are considered as part of the saving of households as domestic units. A further point is that information for households includes subsistence production and consumption, which is usually an important item in African countries and needs to be shown separately. It has already been indicated that all production figures need to be broken down according to industry.

247. Before examining the practical arrangements for the collection of household statistics, it is necessary to see what information is needed apart from the budgetary data. A number of items have already been mentioned in earlier parts of this paper. They include the quantities which correspond to the payments flows, i.e. quantities relating to production and distribution, basic inputs, capital formation, stocks and domestic consumption. The distribution of income and patterns of consumption for the different income and population groups are of particular importance in forecasting future changes in consumer demand. It is also necessary to have simple structural information in respect of household enterprises, e.g. size and utilization of agricultural holdings. In agriculture, acreage and yield measurements and crop forecasts are related to transactions in produce and may form the basis for estimates of these transactions, but they have to be regarded as data of a more specialized type.

248. Information on human resources and economic and social characteristics has already been discussed and it was suggested that in some cases, sample surveys might be more effective than censuses in obtaining information on the characteristics and size of the population and on manpower and migration. Education, health, housing and other aspects of living conditions also have to be taken into account insofar as they are not covered by central sources of information. Reference has been made to the use of retrospective sample surveys as a means of checking

the results of civil registration schemes and of obtaining speedier information in this respect. The final consideration is data on food consumption and nutrition.

General practical considerations

249. The principal characteristic of household statistics is that they are very expensive, because most of the information indicated above has to be recorded by enumerators. However, the importance of having good information on human resources and household activities leaves little choice in the matter and countries have to cope as best they can with what is probably the most difficult task in the collection of statistics.

250. The various statistical requirements in respect of households have to be brought together as components of a co-ordinated programme of surveys, aimed at producing results which are as comprehensive as possible under given conditions. It is important to avoid the disadvantages of multi-purpose surveys, although these may be useful in the earlier stages of statistical development to produce crude information quickly. They should not be regarded as a permanent feature of statistical operations. The aim should be to deal separately with subjects which call for different survey designs, while arranging the various investigations in the form of a continuous programme. On the other hand, every effort should be made to group subjects which can be investigated together without undue technical difficulty.

251. Household surveys are in a relatively early stage of development and there are differing opinions concerning the arrangements which should be adopted. In addition there are differences between countries in the priorities attached to subjects for investigation. It therefore has to be borne in mind that the suggestions made here are of a general nature and that flexibility is needed in adapting them to the conditions of individual countries.

252. The household information requirements considered in paragraphs 244-248 can be grouped according to the methods used for collecting the data in the following way:

(1) Population, migration, manpower and social information of a general nature;

(2) Specialized population data concerned with births, deaths, health, etc.;

(3) Structural data on household enterprises;

(4) Current records of household transactions, relating to both entrepreneurial and domestic functions. These should include data on related quantities and on assets, liabilities, etc. The records are needed not only in estimating aggregates with respect to enterprise and domestic activities, but also in showing the distribution of these activities;

(5) Specialized current records of household enterprises including, in particular, acreage and yield measurements and crop forecasts.

253. For item (1), which relates to population size and characteristics, including data on migration and manpower, the traditional method of collecting information, except insofar as it is obtained from centralized sources, is the population census. The alternative is a sample survey of the type referred to in paragraph 171 and countries adopting this arrangement would probably prefer to regard it as a special ad hoc operation. In the case of manpower surveys it was suggested in paragraph 177 that countries might find some difficulty in organizing separate investigations on a regular basis and the same applies to migration data obtained by this means. However, it should be noted that current household surveys usually involve a preliminary enumeration of households in selected primary units for the purpose of establishing a second stage frame. This work does provide the opportunity for collecting a limited amount of information on migration and manpower,

as well as on other social and economic characteristics and may also give some indication of changes in population size. The use of the arrangement cannot be regarded as a substitute for specialized population enquiries, but it is a supplementary source of data which should not be ignored.

254. Retrospective sample surveys concerned with births and deaths, special health surveys and other similar enquiries are covered under item (2). These all have to be regarded as separate operations which cannot be carried out in conjunction with other statistical work. They include nutrition surveys, but not data on food consumption, as African countries have already expressed the view that this should be collected as far as possible in conjunction with current household statistics. It should be noted that retrospective surveys are particularly expedient for measuring fertility and that fertility trends are significant for planning and other purposes.

255. The collection of information coming under items (1) and (2) has already been dealt with in connexion with population and social statistics and the purpose in referring to it again here is simply to draw attention to its relation to other statistics at the household level.

256. Item (3), which deals with structural data on household enterprises, corresponds with the industrial census in the organized sector in that it provides basic information on the number and size of enterprises in the various industries, plus a simplified indication of their composition and activities. This information is of great importance in development planning, but it should be noted that enquiries made in this connexion do not give direct estimates of output. Also they are not intended as the basis for a list of enterprises to be used later in collecting current statistics. The units concerned are too small and change too rapidly for this arrangement to be effective. The most significant operation coming within this field is the census of agriculture, which most countries aim to carry out at least decennially. Agriculture covers the major proportion of household enterprises in African countries

and recommendations for the conduct of agricultural censuses are given in the FAO Programme for the 1970 World Census of Agriculture. There might be some objection to regarding agricultural censuses as household surveys because households may contain more than one agricultural holder. However, it should be noted that small scale farming activities are very closely related to households and that there is no difficulty in preserving the international definition if information on household agricultural enterprises is sub-classified on the basis of holders. The only other comment which should be made here is that, in countries where other household productive activities are important, they may logically call for a periodic investigation similar in nature to the agricultural census. The possibility of combining all enquiries of this type to form a census of household industry would be largely dependent on the conditions and requirements of individual countries.

257. It is items (4) and (5) which present the greatest difficulty and amount of work, since they cover data relating to all current productive and domestic activities of households. Surveys dealing with these questions are relatively under-developed in Africa and, very often, countries have limited themselves to household budget records in particular localities and small areas and the use of acreage and yield figures to provide estimates of agricultural production. The results obtained by these means are, of course, very incomplete when seen in the light of the comprehensive type of statistical programme discussed in this paper. Very much more can be achieved and a number of countries have carried out surveys covering wide areas and dealing with all household transactions and related information.

258. In this paper considerable emphasis is placed on the need for comprehensive household statistics for three main reasons. Firstly, the information is required in building up an over-all statistical picture. Secondly, properly balanced accounts are one of the best ways of ensuring the reliability of information derived from households. Thirdly, estimates of agricultural production obtained from acreage and yield measurements are often unsatisfactory because of large sampling

and non-sampling errors, so that there is a need for more direct recording of actual production.

259. Some notes on the surveys associated with items (4) and (5) are given in the sub-sections dealing with rural and urban household statistics below. The remarks are as brief as possible because the development of household surveys will be the subject of a separate paper requested by the Third Conference of African Statisticians.

Rural household statistics

260. Rural surveys covering household transactions usually call for a long recording period because of the multiplicity of small items which comprise household receipts and payments and because of seasonal variations. Since the households themselves maintain no accounts, the only satisfactory possibility is to compile these records for them over quite a long period. One of the central objectives should be to obtain a good idea of the total income of individual households because, if this can be done satisfactorily, most of the more detailed information can be obtained without undue difficulty. Also, income forms the basis for much of the analysis of household records.

261. The normal method of reducing the cost arising from the length of the recording period in rural surveys is to use a calibrated sample to obtain fairly wide geographical coverage as well as a continuous record of budgets, which may cover a complete year. The method involves the use of intensive small-scale samples which are used in correcting the memory records obtained from the over-all sample and in supplying more detail. The budgets include quantity records for sales, purchases and subsistence consumption and take account of other non-monetary transactions. The work can be carried out by enumerators of relatively low educational standard, provided they are given intensive instruction in their duties. Also a direct check on accuracy can be obtained by comparison of the results with the purchases of marketing organizations and other available data if the relevant items are shown separately in the survey records.

262. Even though this arrangement effects considerable economies, countries will not be in a position to apply it on a national scale in the early stages of development and some may never be able to build up a large enough field staff for this purpose. It has already been pointed out in paragraphs 96-98 that a field organization has to develop gradually and many of the initial enquiries are little more than pilot projects. However, once a reasonable number of staff have become experienced in the work (say 60-100 enumerators, plus supervisors), it is possible to deal with different areas of the country in succession, so that complete coverage can be achieved over a period of several years. When regional branch offices have been established, with the field organization divided between them, at least some continuous work can take place in all regions. It should be noted that areas chosen for attention in the earlier stages are usually those which are more important with respect to agriculture or other factors, or which are of particular interest for development purposes. Areas with a high degree of subsistence farming may be accorded lower priority and simpler forms of enquiry may be used.

263. The general arrangement of a survey covering one of the more important producing areas might be as follows. A first stage sample is selected with enumeration areas as primary units, using the frame described in paragraph 172. To obtain the frame necessary for the second stage selection, the households in the primary units are then enumerated. This part of the operation is carried out well before the beginning of the main harvesting season. The enumeration would include a simple memory record of the previous season's crop production and its disposal between home consumption and sales, together with information on any other important items of production and on household composition. Actual acreage measurements are not possible at this stage, but some estimates might be recorded for forecasting purposes, possibly on the basis of changes in the areas planted as compared with the previous year. Simple information on migration, manpower, etc. could be obtained in conjunction with the enumeration, as suggested in paragraph 253.

264. The second stage sample of households is then selected, possibly using stated production as a basis for stratification. Other factors which might be taken into account in this connexion are the number of persons actively engaged in household enterprises and the use of equipment. Recording of production, sales and other transactions then proceeds by means of weekly or fortnightly visits to all households in the sample. Changing sub-samples are visited daily for shorter periods to obtain records of subsistence production, additional detail on household purchases and other items and to check and, if necessary, amend the results from the main sample. The principal item in respect of which adjustments of this sort might be necessary is domestic expenditure, but it is possible that the sales records obtained during the less frequent visits might also be biased in some cases. The principal items of information which need to be covered by household records of the type considered here are indicated in Annex II. These cover both domestic and enterprise activities and, as households do not make any distinction between the various types of transaction, they are arranged in a manner which can form the basis of a single balanced account.

265. Records would need to be maintained as indicated above during the entire harvesting period, but, during the remainder of the year, they could possibly be limited to a sub-sample. It is necessary that this period should be covered in order to take account of income from sources other than agriculture, as well as subsistence consumption, farming and domestic costs, etc. The selection of the sub-sample for this purpose requires special consideration because information for an improved stratification is available before this part of the survey takes place. It should be noted that, apart from the possible use of a sub-sample, the recording arrangement is the same as during the harvesting period and forms a continuation of the records obtained during that period.

266. The three preceding paragraphs indicate the general sampling and recording arrangements which might be used for a rural household survey, but nothing has been said about sample size with respect to the relative numbers of primary and secondary units which might be selected. This is

a matter which requires further investigation during the course of pilot work. The usual situation, particularly with respect to the production of cereal crops, is that the variation is greater between primary units than it is within them. As far as practicable it is therefore desirable that the number of primary units, i.e. enumeration areas, selected should be relatively large and that the number of households chosen within each for second stage recording should be fairly small. This implies that each enumerator should be able to cover several primary units.

267. The method described above has been well tried in several countries, but some pilot work is necessary to ascertain the nature of the response to "memory" questions used in obtaining data for stratification and the probable extent of the bias in some items of the records made during the less frequent visits, as well as to solve practical problems arising in connexion with transport of field staff, supervision, co-operation of households and to get some preliminary idea of variations between and within primary units. The need for these initial investigations is a further reason why it is desirable that survey work should be developed gradually and this also implies that activities in this field should start at an early stage so that there is sufficient time for some experimentation.

268. Household enterprises which probably need special consideration when planning surveys are livestock and fisheries because of their very uneven geographical distribution. In the case of livestock, a considerable amount of additional data can be obtained from the operations of veterinary officers and these people are of particular importance in conducting specialized investigations into breeding rates, etc. In general, surveys in which livestock and fishing are of importance either need to be carried out as special operations, or samples should be arranged so that the areas concerned are adequately covered. This implies a special stratification on a geographical basis. Similar considerations, of course, apply to the geographical distribution of crops, handicraft activities, etc. When all these factors are taken fully into account, the survey arrangements become very much more complicated and it is

suggested that, in earlier work, it might be better to aim at getting good figures for the total value of household production and other items in the form of a comprehensive budget and to improve the industrial classification of enterprise activities at a later stage.

269. There are possibilities of simplifying the recording in rural household surveys in order to achieve greater economy, but too much simplification would be a danger in the early stages. At the beginning of their survey work countries do not have adequate knowledge of the relative importance of the various factors investigated, or of the extent of recording errors. It is possible to start introducing simplified methods with some confidence only after experience has been gained through fairly comprehensive surveys whose results have been examined by means of consistency and other checks. Present indications are that simplifications will lie mainly in the more extensive use of memory records, but great care is needed in this respect.

270. An accurate assessment of staff requirements for the surveys suggested above requires investigation of the conditions in individual countries, but about 60 enumerators should be enough for a sample of reasonable size, i.e. approximately 1,000 households. This would provide a mobile team which could deal with one region or part of a region each year and this could perhaps be considered the first objective after the initiation of survey work. The second objective would be more complete coverage with a total of 200-300 enumerators divided between the regions. It should be appreciated that these people would not be working on current household surveys continuously, as they would also have to participate in the structural enquiries to which reference has already been made.

271. The last group of items which has to be considered is the more specialized current data of household enterprises, covered under item (5) in paragraph 252. This is almost entirely agricultural and relates principally to acreage and yield measurements and crop forecasts. It needs to be co-ordinated as closely as possible with other current statistics and should preferably be obtained in conjunction

with the household surveys described above. It is dealt with separately here because its rather specialized nature requires that most of it should be collected by agricultural staff and not by the field staff of the statistical service.

272. Acreage and yield data has to be collected during a rather limited period of the year and therefore calls for a fairly large number of staff on a discontinuous basis. Therefore, apart from the question of specialized training needed, the measurements cannot readily be accommodated in the work programme of the statistical staff. Extension and other staff of agricultural departments can more easily undertake this work and it is more closely aligned with their normal duties. The measurements would be made during the earlier part of the second stage of the surveys described above and, for acreage, it is desirable that all land operated by the households in the second stage of the sample should be measured. In this connexion it should be noted that it is not always possible to make an accurate estimate of the time required for the operation and it sometimes turns out that measurements for the whole sample cannot be completed in the time available. It is therefore safer to proceed on the basis of an expanding sub-sample and one method of doing this is to make measurements successively for the sub-samples referred to in paragraph 264. At any time when the work has to be brought to a close it is then certain that the measurements apply to a statistical sample of households. The problem relating to yield measurements is similar but not so significant because in most cases these would be limited to key crops.

273. With respect to crop forecasts not forming the subject of specially developed techniques, the basic requirements are estimates of changes in the acreage planted and in the condition of the growing crops as compared with the previous year. The acreage information can be obtained at a relatively early stage and it has been suggested in paragraph 263 that this might be done during the preliminary enumeration of households. At this stage a large sample could be covered, but the records would be crude and would have to be made by the statistical

enumerators. If the work were left until after the selection of the second stage of the sample, it could more easily be carried out by agricultural staff and this would probably be the most satisfactory arrangement. Crop forecasts are needed as early as possible and it should be noted that, with careful planning, the timing of surveys can be arranged so that the sample of households becomes available when needed for forecasting purposes. Forecasting data is usually rather simple and crude because it has to be collected quickly and it is something completely different from the acreage and yield measurements referred to in the last paragraph.

274. Since household surveys cannot cover all parts of a country every year, at least in the earlier stages of statistical development, it is necessary to make some other arrangement for intermediate years in respect of the more important items. These are again mainly agricultural, the essential factors being crop forecasts and estimates of actual production and the work of collection would be the responsibility of agricultural field staff. One method, which avoids the need for any new large scale enumeration of households, would be to continue to use the second stage sample from the previous survey. Visits to these households would provide an indication of acreage and crop condition changes to serve as a basis for factors to be used in adjusting the survey results to form forecasts for the current year. Estimates of actual production could be based partly on memory records and partly on acreage and yield measurements for the same sample.

Urban household statistics

275. Urban households differ from those in rural areas in that a much higher proportion of their income normally comes from wages. Seasonal variations in activities, income and expenditure also tend to be less. Shorter recording periods can therefore be used than in rural areas. This makes the programming of urban surveys more flexible and they can be arranged to take place in periods when rural survey activity is less intense, thus enabling greater continuity in the work of the field staff.

276. The information requirements are basically the same as in the case of rural households, i.e. records of domestic and enterprise activities, plus other supporting data. The enterprises, however, may be somewhat less important and the greater part would be concerned with distribution.

277. Urban budget surveys are usually among the earlier statistical field enquiries and much of the demand for them arises in connexion with wage policy and other specific requirements. It is important, however, that to achieve their full utility, they should cover the full range of incomes even though only part of the results may be needed for cost-of-living indices and other purposes.

278. The design of surveys in urban areas may differ from that of rural enquiries because a frame of much smaller units may be practicable at the first stage. In many urban areas, houses are numbered and there are sometimes house lists available. Very often this can form a convenient basis for the first stage enumeration. Urban surveys need to be repeated at fairly regular intervals.

Development of administrative and other records

279. All the above comments on household statistics have been concerned with the collection of information direct from the households themselves and it is important not to forget the fact that a great deal of useful data can be obtained from administrative records. In addition to the existing marketing organizations, it seems likely that there will be further development of farmers' co-operatives which will be concerned not only with the buying of produce but also with the distribution of seed, etc. and the provision of farming services. The records of these institutions can become an increasingly important source of data on rural activities in general. For purely commercial crops, such as cotton and tobacco, they can provide complete information on production. For foodcrops, including maize and other cereals which are consumed locally, only partial production records can, of course, be expected. In the case of all products some information on purchased inputs should be obtainable.

280. For some crops agricultural departments may have direct responsibility for the distribution of seed and for spraying on a payment basis. Records of these activities should be useful in making acreage estimates. Also agricultural departments sometimes carry out surveys connected with special problems and much of the data can be of assistance in comprehensive planning, even though not originally intended for this purpose. In some countries where handicrafts are important, government agencies have been set up to promote development in this field and their records can usefully be developed. Trade statistics are another useful source of centralized data.

281. It is important that the fullest use should be made of the information which can be derived from the administrative and other existing activities and it may transpire that this can greatly reduce the need for and the cost of data collection by more direct means. To some extent it may involve a rather piecemeal approach, but it is clearly desirable that no possible sources of information should be ignored, particularly under circumstances where statistical resources are limited. A further point is that independent data from these sources can be a very useful check on some of the results of household surveys.

282. Finally, mention should be made of surveys of goods in transit by road. These are a reasonably cheap means of collecting data, although their utility may be somewhat reduced by the fact that much of the produce in transit may already have been recorded by marketing organizations. Nevertheless, they are a good method of determining supply areas for the main towns and can also be of help in planning transport development. It is usually possible to avoid inconvenience to traffic by siting check points at normal stopping places.

283. An additional possibility is to arrange transport checks to cover the same areas as household surveys in order to show quantities of goods entering and leaving the survey areas. These records not only provide a check on some of the survey results, but also give additional information on the relationship between the survey area and the rest of the country.

Wholesale and retail prices

284. It has already been noted that countries usually tend to delay the collection of comprehensive information on distribution and service enterprises until a relatively late stage of statistical development. This is necessary because of the difficulty in obtaining data from the large number of small units involved. However, it does not greatly affect the establishment of a reasonably satisfactory statistical account of activities provided there is an alternative means of estimating the distribution margins on the various types of goods sold and the profits arising from services. Much help can be obtained from price data, particularly in the case of distribution margins.

285. Price data is in a somewhat special position. Countries require retail price series for individual commodities at an early stage and, in most cases, steps have been taken to secure the necessary records. These series are important in measuring changes in the costs of living and in detecting imbalances in the supply and demand of goods for personal consumption. The data is easier to gather than that relating to other aspects of the distribution industry and is normally compiled in the form of retail price indices. Such indices are more significant indicators of inflationary tendencies than changes in reserves provided satisfactory price quotations are obtained and the indices are properly constructed so far as the indicators are concerned. The weighting system is much less important than is generally believed.

286. Wholesale prices are perhaps a somewhat more difficult proposition, but their collection should be instituted for selected commodities and for groups of commodities to fit the general accounting system. Thus indices for groups such as building materials, inputs into textile industries, output of consumer durables, etc. do not merely throw light on price movements for the groups concerned, but can also contribute to a solution of the wider problem of price deflation.

287. A great deal of price information can be collected by regular postal questionnaires, although some follow-up visits are usually necessary. However, retail prices in markets, etc. require regular

work by enumerators and often present special difficulties, particularly when prices are dependent on bargaining and goods are not sold in easily identifiable units. The only satisfactory method is for enumerators to weigh goods purchased and the two common arrangements are for them to make purchases themselves or to interview customers who happen to have bought the items concerned.

Concluding Comments

288. The general position regarding the development of statistics in Africa is encouraging, but there are still wide differences between countries and a great deal of further progress is needed before statistical information services can be considered satisfactory. It has been noted that more rapid statistical development normally begins after countries have begun to take an active interest in the technical aspects of planning.

289. In the very early stages, the most important requirements are to have good population census and external trade data, supported by such material as may be available from administrative sources. It is essential that a satisfactory analysis of public finance should be established as soon as possible. Early attempts should be made to compile national accounts, including estimates of capital formation, because these not only help towards an understanding of the structure and functions of an economy, but also serve to indicate some of the principal requirements for statistical development. It is also necessary to initiate the collection of statistics of organized enterprises and households at an early date, since the development of these subjects takes a considerable time.

290. Many African countries, however, are well past the initial stages of statistical development and already have well established statistical offices. In these cases, the problem is not so much one of starting new work, but of improving the quality and coverage of the data obtained. These countries have reached the point where more detailed thought is required on statistical methodology and programming. It has been suggested that work in this connexion will be facilitated by paying special attention to the requirements in building up a comprehensive statistical account and to the inter-relationships of the various sectors of the economy.

ANNEX I

Summary of principal conclusions

1. Co-ordination of statistical activities between countries is an important means of achieving standardization and methodological development. Exchange of information on current work is particularly helpful in ensuring the widest possible application of experience gained in adapting statistical arrangements to African conditions.

2. A number of factors influence the speed at which statistical development can proceed and, of these, the demand for information for planning purposes and the availability of staff are probably the most significant. Once technical planning activities have started in earnest, a country's statistical service is required to expand considerably and high priority can usually be obtained in recruitment matters. It should be borne in mind, however, that the statistical service has responsibility for supplying information to commercial firms, the public and overseas agencies in addition to the planning organization.

3. Requirements for statistical data are much the same in centrally planned and market economies and broadly consist of a comprehensive account of the economic and social situation. The comprehensive nature of the requirements should be the main consideration in planning statistical operations.

4. National accounts do not provide an adequate basis for organizing a statistical programme, but, directly or indirectly, they do cover a large part of the data requirements. Their importance lies in providing a means of consolidating information on all types of activities in an integrated manner. The accounts, together with supporting data, can be used in making projections which are essential in forecasting the effects of development plans and other factors influencing the general economic and social balance. The work of compiling the accounts gives a useful indication of those branches of statistics which most urgently require development.

5. Arrangements such as the UN System of National Accounts provide a number of very useful aggregates and a standardized method for international reporting of some economic data. For a satisfactory analysis of production it is necessary to include transactions in intermediate goods. A complete input-output analysis would not be practicable in the immediate future and it is suggested that, as an intermediate measure, it would be useful to utilize a modified system involving estimates of the consumption and production of intermediate products by each industry without showing details of inter-industry transactions.

6. Important groups of data not covered directly by national accounts statistics are those relating to human resources and conditions of life, material resources and the quantities of current production and distribution. This information is the counterpart of the payments flows in the national accounts. In addition, a more detailed analysis of some sectors is required for particular purposes and special attention has to be given to sources of funds for investment.

7. Payments flows form the essential link between the various branches of activity because monetary values are the only convenient common unit of measurement. Nevertheless, human and material resources are the basic factors on which development is dependent.

8. There is a need to maintain a comprehensive view of all branches of activity when considering data collection and analysis. It is important to avoid concentration of work on isolated topics, since this can lead to imbalance in the statistical programme and an unsatisfactory knowledge of the inter-relationships between sectors. Particularly in the early stages of statistical development, the comprehensive approach enables the best possible use to be made of incomplete data because it provides the means of making a wide range of consistency checks and adjustments. This does not obviate the need for regarding improvement in the quality of basic data as a factor of primary importance.

9. The principal practical considerations in developing a statistical organization are:

(1) To ensure impartiality of statistics, it is necessary that the statistical service should operate on an independent basis, but it should nevertheless have a very close working relationship with the planning agency.

(2) Within certain limitations, it is advisable that statistical work should be centralized as far as possible during the early stages of development in order to make the most economical use of available trained manpower, to facilitate the co-ordination of work and to ensure that data are received in satisfactory form and on time.

(3) The internal structure of the organization should be flexible in order to accommodate adjustments resulting from changes in priorities and the expansion of work.

(4) Statistical functions should be controlled by legislation which ensures secrecy in respect of data relating to individual persons, firms, etc., and which provides the means of compelling respondents to provide information. Compulsory powers, however, should rarely be used in practice.

(5) Staff recruitment arrangements should aim at early Africanization. Satisfactory conditions of service are necessary to ensure that there is no unduly large loss of personnel, particularly at professional and executive levels. Adequate training facilities at all levels are a requirement of primary importance and these may involve both full-time and in-service courses. It is necessary to make full use of the various forms of technical assistance if work is to be developed sufficiently rapidly.

(6) An economical arrangement of work at professional level is needed to make the best use of limited resources. One method of achieving this is to group a small number of the best qualified

professionals in a statistical planning unit which is concerned exclusively with technical matters.

(7) An early start is needed in developing a permanent field organization which is later placed under the control of regional branch offices of the statistical service. The field organization is essential because so much of the information needed in a comprehensive statistical programme has to be obtained by direct means.

(8) Suitable data processing equipment is required and its selection calls for particular care.

(9) A good library of reference material has to be built up and this can be based partly on exchange agreements with other agencies. The statistical service usually needs a simple printing machine for reproducing its own publications and forms quickly enough.

10. In the very early stages of statistical development, work would be confined to a small number of important fields which might include the following:

National accounts
Public finance
External trade
Statistics of larger enterprises
Household statistics, retail prices, etc.
Data from other administrative sources and preparation of statistical bulletin.

11. It is important that coverage should be expanded as quickly as possible and, at a later stage of development, the organization of substantive work would be dependent partly on the nature of the subjects investigated and partly on the methods of collecting data. One possible grouping which takes account of this compromise is as follows:

National accounts

General economic and financial statistics

- Capital formation
- Public finance
- Balance of payments
- Money, banking and insurance
- Financial flows and balances

Population and social statistics

- Demographic statistics
- Employment
- Education
- Housing
- Health
- Other social statistics

External trade statistics

Statistics of enterprises, households and prices

- Organized enterprises
  - Larger enterprises
  - Smaller enterprises
- Household statistics (including both domestic and enterprise activities)
- Wholesale and retail prices.

12. An indication of the statistical data required and the way in which work might be developed is given in paragraphs 132-287 of the text and in Annex II. Some points of special significance are as follows:

(1) An extended system of national accounts has to be developed as an important planning tool and also serves to co-ordinate statistical work and assists in maintaining a balanced statistical programme at all stages of statistical development. While the accounts have to be adapted to meet the requirements of individual countries, the need for maintaining international comparability of data should not be neglected.

(2) Capital formation, which is closely related to the national accounts, is one of the two main elements in African development planning and it is necessary to have a good idea of the structure and progress of capital formation.

(3) Public finance statistics are relevant to economic planning because of the importance of government expenditures and they can and should be developed at an early stage. Information on public enterprises should be shown separately from other enterprise activities.

(4) Balance of payments, which includes external trade, is the second main element in African planning. The more easily recorded items present little difficulty, but special attention has to be paid to payments in respect of shipping services, wages taken abroad by migrant labourers, unrecorded movements of goods across frontiers, etc.

(5) Information on financial flows and balances is not easy to obtain and work in this field is relatively underdeveloped in most parts of the world. It is, however, necessary to have some indication of the sources of founds for domestic investment and the general financial position of each of the main sectors as quickly as possible.

(6) Statistics of population, including migration and manpower, are of basic importance, particularly in long term planning. The traditional method of the population census should be utilized in the earlier stages, but, once a satisfactory sampling frame has been established, consideration might be given to the use of sample enquiries which would enable more intensive investigation and more accurate recording.

(7) External trade data, in addition to being analysed in accordance with the SITC or BTN, should also be classified on an industrial basis and imports should be divided between intermediate and final products.

(8) It is suggested that, for purposes of data collection, enterprises should be considered in three broad groups:

Larger enterprises which keep accounts and which can supply information by means of postal questionnaires, provided there is support from limited field operations to deal with more difficult cases. It is necessary to maintain a register of such enterprises to serve as a basis for investigations.

Smaller enterprises which do not normally keep adequate accounts and which have to be investigated by direct enumeration. These are mainly small manufacturing, trading and service enterprises. They occur in fairly large numbers and are relatively unstable, so that it is not practicable to maintain an up-to-date register. Investigations are usually conducted on the basis of area samples.

Enterprises which are very closely linked with household domestic activities. These include a large proportion of African agriculture, as well as handicrafts, trading, etc. They also have to be investigated by direct enumeration and there is, of course, no possibility of maintaining a register.

(9) Household statistics involve direct enumeration and usually a fairly long recording period. The basic questionnaires should be arranged to cover transactions relating to both household enterprise and domestic activities in the form of a single balanced account in which the various items are adequately distinguished. The cost of the surveys is such that complete coverage cannot be achieved on an annual basis and the best arrangement would probably be to deal with different areas successively over a period of years, concentrating on the most important areas first. Specialized household data such as acreage and yield measurements and information for crop forecasting would normally be collected

separately by staff of the departments concerned, but there would be considerable advantages in using the same samples of households as those in the general surveys. Household survey procedures can be considerably simplified, but it is suggested that this should be left until a later stage of development.

(10) In all statistical operations requiring direct collection of data, the fullest use should be made of supplementary information from administrative sources.

(11) Wholesale and retail price data is required to provide not only current cost indicators, but also an assessment of distribution margins. This is of special importance when it is not practicable to include distribution in the current statistics of organized enterprises. Price indices are important in detecting economic imbalance and inflationary tendencies.

13. In many African countries statistical services are already reasonably well established. In these cases, the problem is not so much one of starting new work, but of improving the quality and coverage of the data obtained. This may be regarded as a further stage of statistical development which involves more detailed thought on questions of methodology and programming. It has been suggested that work in this connexion will be facilitated by paying special attention to the requirements in building up a comprehensive statistical account and to the inter-relationships between the various sectors of the economy.

ANNEX II

Annotated list of statistical series

1. The list of statistical series and related notes presented in this annex are, to a large extent, a summary of the section in the text dealing with the work programme and the general arrangement is much the same. Wherever possible, more detail has been introduced in respect of specific items, but it will be appreciated that such detail usually has to be determined in the light of local conditions. Reference to some points therefore still remains of a general nature and, in other cases, further adaptation would be needed.

2. For each statistical series an indication has been given of the frequency at which the material should be collected and the notes relating to statistical operations deal, where applicable, with both initial arrangements and methods by which work might be extended. The notes relate to the development of individual subjects and not to the statistical programme as a whole. The initial arrangements indicated would not, therefore, all be instituted at the same time and the actual programme in any given period would be dependent on the priorities allocated by individual countries. However, there are clearly some basic priorities which would influence statistical work in most countries and these have been suggested in the text of the paper rather than in the list of items.

3. No separate reference has been made to geographical coverage of series because, in general, national statistics with an appropriate breakdown should be the objective. Indications of geographical coverage have been given only in the case of items where special arrangements are necessary or where this factor is an important consideration.

4. References to some methodological publications are given in a separate list which follows the list of statistical series. The publications are listed under the same numbers as the series.

5. Full use has been made of the list of series contained in Statistical Series for the Use of Less Developed Countries, Series M, No 31. The coverage of the list given here is much the same as in this document, but

the arrangement is different due to the operational considerations described in the paper. It should be noted that relatively few indications have been given of the desirable ways of tabulating the various series. In cases where a number of items have been listed for investigation in respect of a particular unit it is assumed that records would be arranged so that cross-classifications can be made between all the items.

Annotated list of statistical series

NATIONAL ACCOUNTS AND CAPITAL FORMATION

Note: These topics are included here as specific items since they are dealt with as separate subjects in statistical offices. Details of the series needed for their compilation are shown elsewhere in the list.

1. Data for an extended system of national accounts. Annual

Initial attempts to compile national accounts are necessarily rough and utilize whatever data are available. The object is to provide a crude but comprehensive indication of the structure and working of the economy and to show which statistical fields most urgently require development.

Data for more satisfactory national accounts estimates come largely from statistics of capital formation, public finance, balance of payments, external trade, industry, households, and wholesale and retail prices. However, supplementary information on population, employment, etc., also has to be used.

2. Data on fixed capital formation, by type, by industry and by institutional sector. Annual

In the early stages, estimates are derived from imports of fixed capital goods and constructional materials, records of construction by government and the larger enterprises and local authority records of building permits, etc.

More complete coverage and a better industrial classification of capital formation is achieved by making use of the capital data from industrial and household surveys.

OTHER GENERAL ECONOMIC AND FINANCIAL STATISTICS

Public finance

3. Total cash receipts and disbursements and changes in cash holdings and public debt. Annual and monthly or quarterly

Rearrangement of data relating to central government, based on existing accounting definitions, with later extension to local authorities, public boards and corporations, etc.

4. Economic and functional classification of budgets. Annual (at beginning of financial year)

Detailed reclassification of central government budget with later extension to other levels of government, etc., as above.

5. Economic classification of receipts and disbursements } Annual
6. Economic and functional classification of expenditures }

Detailed reclassification of central government accounts with later extension to local government, etc.

Balance of payments

7. Balance of payments classified according to type of transactions. Annual and quarterly

Initially, estimates may be dependent largely on trade statistics, government overseas transactions and changes in gold holdings and in the foreign assets and liabilities of the monetary system. The aim should be an improvement in the quality of estimated items and the collection of more detailed data on overseas transactions.

Money, banking and insurance

8. Consolidated balance sheet as at end of period separately for central bank, deposit money banks and each other major kind of bank, showing: Monthly

Assets classified according to the main debtor economic sectors.

Liabilities classified according to the main creditor economic sectors and liabilities to the private sector sub-divided into money, quasi-money and other.

The data are a by-product of the regulation and administrative records of banks.

9. Loans and advances made, classified according to purpose and to kind of economic activity of recipient, separately for central bank, deposit money banks and other groups of banks. Annual and quarterly

Obtained from the administrative records of banks.

10. Bank debits to deposit accounts during the period. Monthly

Obtained from the administrative records of banks.

11. Discount and rediscount rate of central bank as of end of period. — Monthly

Data from central bank. It is also desirable and it may be feasible to gather data on interest rates on bank and other types of loans, mortgages, forms of government indebtedness, prime bonds, etc.

12. Amount in terms of a foreign currency, of official and bank holdings of gold and foreign exchange, as of end of period. — Monthly

These series are generally a by-product of the regulation and administration of banks and foreign exchange and the activities of the government treasury. It would be advantageous to classify holdings of foreign exchange by type of currency.

13. Exchange rates in use, expressed as units of national currency per unit of a standard foreign currency. — Daily

These series are usually obtainable from the regulation and execution of foreign currency transactions.

14. Data on insurance operations. — Annual

Recommendations regarding series to be collected need further consideration.

Financial flows and balances

15. Data on financial transactions. — Annual

As indicated in the text, most countries find it difficult to obtain the data needed for completing the capital reconciliation accounts of the SNA. The initial requirements are records of gold holdings and foreign exchange reserves of central government and other agencies and of the flows of funds for investment from the principal sectors of the economy and the rest of the world.

At a later stage, a more detailed analysis should be made of the inter-sectoral capital transactions and the assets and liabilities of sectors.

POPULATION AND SOCIAL STATISTICS

Demographic statistics

16. Number of persons at a given date, showing: — Decennial and also, when possible, in conjunction with field surveys

Marital status
Sex and age
Literacy

Type and level of education completed
Ethnic or nationality group
Birthplace and length of residence
Type and size of household

For labour force only:

Employment status
Industry
Occupation
Whether employed or not

For women of child-bearing age and over:

Total number of live-born children.

Data should cover the whole country, distinguishing between urban and rural areas, major territorial divisions and principal cities. It is obtained by means of a census of population, plus the use of sampling for the collection of data for some of the series and for checking purposes. One of the most important by-products of a population census should be a sampling frame based on enumeration areas covering the whole country. When a satisfactory frame has been established, consideration should be given to the extended use of sampling for obtaining demographic information. This makes it possible to obtain more comprehensive and reliable data for economic and social analysis.

The opportunity provided by the first stage enumeration in the surveys referred to in item 86 should be utilized for the collection of data on at least some of the characteristics indicated. Geographical coverage is necessarily very limited in the early stages, but the expanding coverage of household surveys should make them an increasingly useful source of population data. The work should be developed with a view to using the results for revising and supplementing the information for particular geographical areas obtained from the decennial census or sample enquiries.

17.	Number of live births occurring during the year, showing sex, order of live birth and age of mother.	Annual
18.	Number of deaths occurring during the year, by sex, age and cause.	

In the past, many schemes for registration of births and deaths have concentrated on the principal urban areas. A more satisfactory arrangement for the gradual development of registration would entail the use of a progressively expanded sample of areas drawn from all parts of the country. Retrospective sample surveys could be used to check the results of registration, or,

alternatively, could serve as an ad hoc means of collecting data. Causes of death could be based on a simplified classification not dependent on qualified examination.

The eventual aim should be the extension of administrative registration to cover the entire country and causes of death should be properly certified. Tabulations of data should distinguish between urban and rural areas and major civil divisions.

19. Number of immigrants and emigrants during the year, classified by sex and age. — Annual

Insofar as this information comes from administrative records it relates to recorded movements at sea and air ports and land frontier posts. It needs to be supplemented by data from population censuses and surveys in order to obtain estimates of complete coverage. It should be noted that such enquiries are also important sources of data on manpower and internal migration.

Improvements in the data are normally achieved as a result of the extension of administrative control over migratory movements.

20. Number of persons on a given date, classified by sex and age. — Annual

Changes since the previous census would be derived from estimates of natural increase rates and migration and also from the results of current surveys. It is desirable that the figures should be shown separately for the major territorial divisions, as well as for the country as a whole.

Development of vital registration and migration records would eventually provide a basis for more reliable current population estimates, but supplementary data would still be needed on changes in the internal geographic distribution.

21. Data on unemployment and underemployment. — No frequency

It is suggested that this data should not be given high priority during the early stages of development, except in the case of specific problems. Unemployment in urban areas may require special investigation. Some idea of underemployment in rural areas may be obtained from a comparison of population and production figures.

Employment

22. For establishments in each industry, the following data is needed on employees during a given reference period: — Annual and quarterly

Number of each sex
Wages and salaries paid
Number of man-hours worked

Initially, employment statistics might relate to establishments in the larger enterprises in each industry and would be obtained by means of an annual questionnaire. More limited quarterly enquiries are used to show short term changes in the level of employment.

After compiling a reasonably comprehensive list of the larger establishments, the principal aim should be an improvement in coverage. The annual enquiries cannot reasonably include the smaller enterprises which need to be dealt with by separate ad hoc surveys, possibly based on area samples. It should be noted that there is the possibility of collecting series on employment in conjunction with annual industrial statistics.

23. Wage rates, earnings, supplementary benefits and related information, by occupation, sex and skill level in each major industry. — Intervals of 2-5 years

Not essential in the early stages of industrial development. The information becomes important as the modern sector grows and problems of wage differentiation, conditions of employment, collective bargaining, etc., require attention. It is obtained by interview and payroll analysis in a sample of establishments and the work is most satisfactorily conducted by the ministry responsible for labour.

24. Industrial injuries, by place of occurrence, cause, type of injury and severity. — Monthly reports by larger employers and annual publication of summary data

Relatively low priority in the early stages of development, but it may be important to collect the data for certain activities, e.g. mining and construction, where accident rates are high. Early collection may also be necessary in cases where workmens' compensation systems are involved.

Development of this information is dependent on the regular collation of reports from factory inspectors, employers, trade unions, workmens' compensation agencies and insurance companies. Records should be extended to cover industrial diseases as well as injuries.

Education

25.	For public and private teaching establishments at all levels, the following data is needed classified according to level of education and type of establishment: Number of establishments Number of teachers by sex Number of students enrolled, as of a specific period, by sex	Annual
26.	Number of students enrolled in primary and secondary schools, as of a specific date, classified according to grade, sex and age.	

The series are a by-product of administrative records. Tabulations should distinguish between urban and rural areas and major territorial divisions.

The development of educational statistics is largely dependent on improvements in analysis since any additional data needed can be obtained without difficulty. Some items of importance are: teacher-pupil ratios; rates of repetition of particular levels of training; average age for each level and percentage of students above this average, financial data, including costs per student at various levels; examination results at the major levels. Regional and inter-school variations are important.

27.	Register of higher level manpower.	Continuous maintenance

This is an administrative rather than a statistical item, but is closely related to the information indicated above. It covers all persons attaining school certificate and higher educational levels and those with special technical qualifications.

At a later stage an attempt might be made to follow the careers of the persons covered by the register for at least a short time after qualification. The objective is to make the fullest use of available trained manpower.

Housing

28.	Number of occupied dwelling units as of a specific date, showing: Type of unit Number of occupants and rooms Type of water supply.	Decennial and also, where possible, in conjunction with field surveys

29. Number of vacant units by type.

The information is normally obtained in conjunction with a population census. In operations involving complete enumeration it is likely that the maximum data obtainable would be number and type of housing structures, number of rooms and occupants and type of water supply. In the case of sample surveys, either associated with a complete enumeration or carried out separately, it is possible to distinguish dwelling units and to classify occupants on a household basis. All records should distinguish between urban and rural areas and the major administrative divisions.

More extensive information collected in conjunction with sample population and other enquiries would include a classification of dwelling units by ownership, a more detailed analysis of their occupants in terms of persons and households, the type of tenure of the occupants and availability of electricity and toilet facilities. For urban dwellings, information should be obtained on structural materials of walls and roof. The expanding coverage of household surveys would enable the collection of up-to-date information on the housing stock for reasonably wide areas and this would serve as a means of revising the data collected decennially.

30. Current estimates and projections of the number of households by size and type in the urban and rural areas of each administrative division. — Annual

Estimates are based on the previous population census and estimated natural increase and migratory movements.

The estimates may be improved through the use of current household survey data and civil registration and migration records.

31. Records of new buildings, extensions and obsolescence, by type, number of rooms, type of water supply and ownership. — Annual

Information on construction and obsolescence of dwellings owned by government, local authorities and commercial enterprises is obtained from the agencies concerned. Information on housing erected by private owners in urban areas can be obtained from local authority building licence records and sometimes from completion records.

The quality and coverage of the data can be improved when local authority records become more efficient and are extended to smaller localities.

Health

Note: Mortality is not included here as this is already shown as item 18 above. Also, industrial injuries and diseases appear as item 24.

Morbidity

32.	Records of notifiable communicable diseases.	Annual and more frequently when necessary
	Consolidation of data from authorities designated for notification.	
33.	Data from mass diagnostic and screening surveys (tuberculosis, leprosy, etc.).	No periodicity
	Areas for investigation are selected on the basis of known health risks.	
34.	Data from sickness surveys.	No periodicity
	Sample surveys might initially be carried out in areas where sickness has an important bearing on productivity. In some cases enquiries might be applicable to particular industries.	
35.	Registration records of certain diseases (cancer, leprosy, etc.)	Continuous
36.	Data on road accidents.	Annual
	The information is obtained mainly from police and hospital records.	
37.	Hospital in-patient admissions and discharges by type of hospital. Obtained from hospital administrative records.	Annual
38.	Hospital in-patient discharges, by cause of hospitalization, length of stay, age and sex.	Annual
	Obtained from hospital administrative records.	
39.	Hospital and health centre out-patient visits by type of service.	Annual and quarterly or monthly
	Statistics are dependent on the quality of the records maintained and complete coverage of hospitals might be the initial objective.	

The series should later be extended to cover other health centres. Eventually consideration might be given to obtaining information from private health practitioners, particularly when a national health service is contemplated.

Health personnel and institutions

40.	Number of medical and auxiliary personnel, physicians, nurses, dressers, sanitarians, etc.	Annual
41.	Number of hospitals, hospital beds, health centres, by type of institution and by ownership	
42.	Capital formation, by type of capital goods	
43.	Expenditure for health purposes, by type	

The data are obtained from administrative records.

EXTERNAL TRADE STATISTICS

44.	Value and quantity of exports and imports, showing countries of destination (preferably of last consignment) of exports and countries of origin (preferably of first consignment) of imports for each commodity.	Annual and monthly

The data are a by-product of the control and administration of external trade. Countries with multiple or fluctuating exchange rates should preferably value exports in terms of a foreign currency as well as a local currency. Data should be tabulated in accordance with an internationally accepted classification (SITC or BTN).

Efforts should be made to achieve more complete coverage of trade statistics, particularly in countries with long land frontiers and to improve the speed of processing data.

45.	Industrial classification of imports and exports and division of imports between inputs and final products.	Annual

Derived from basic trade data.

46.	Index numbers of quantum and unit value during the period for commodities exported and imported, classified according to economically significant categories. (e.g. stage of fabrication, use and origin).	Annual and quarterly

Derived from basic trade data, but should not be attempted until satisfactory trade series have been established.

STATISTICS OF ENTERPRISES, HOUSEHOLDS AND PRICES

Note: The following sections covering the principal industrial fields indicate the basic requirements in each case and the general methods of collection. The items are largely the same as in Series M, No 31, but it is felt that more series in respect of transactions might be obtainable, particularly for larger enterprises. It should also be noted that some industrial activity is included under household statistics which are dealt with separately.

Agriculture

47. The following information is needed in respect of agricultural holdings: — Decennial

Area
Kind of tenure
Whether irrigated
Type of power used
Utilization of land during previous crop year
Area under field crops according to species
Area and number of trees and vines according to species
Number of livestock at a specific date according to species, sex and age.

The data would result from a census of agriculture, but an area sample might have to be used in the early stages. For peasant farming, there would be advantages in relating the operation as closely as possible to general household surveys.

48. Area sown and harvested, yield and production during crop year for key field crops. — Annual

49. Number of trees and vines of productive age and yield and production for the key crops.

50. Number of livestock held at a specific date and number slaughtered during the year for key kinds of livestock.

For the larger agricultural enterprises information is collected by means of postal questionnaires. For the smaller units sample enquiries of farm holdings have to be used. There are advantages in associating the latter as closely as possible with general household surveys. Additional information from marketing organizations, slaughterhouses, and records of relevant government administrative activity would also be utilized.

National coverage of current agricultural statistics usually takes a considerable time to develop. The methods to be used are dependent largely on changes in the farming organization.

51. Gross capital formation in agricultural machinery and equipment. — Annual

The series might be estimated from production and external trade data on the commodities used as agricultural equipment, together with relevant price data. In addition, data could be obtained by more direct means in the course of the annual surveys.

52. Index of agricultural production during crop year. — Annual

Most countries would find it difficult to obtain the data needed for the index in the early stages of development. It is first necessary to have agricultural census and other structural data for estimating weights and then satisfactory series on annual production to provide the indicators. A net-weighted index would be preferable when adequate data on agricultural inputs becomes available.

53. Data for forecasting production of some key crops. — Before or early in harvesting season

Special arrangements have to be made for the collection of this data and the work is usually carried out by the agricultural field staff. Better results are often achieved if records can be based on comparisons with the previous season's crop. Forecasts are particularly important in the case of crops where overseas marketing policy has to be determined without delay.

Forestry

54. Forest inventory, showing: — Quinquennial

Areas in forest land categories
Density of the productive forest
Composition and management status of the forest in use
Growing stock and growth during the year of forests in use
Fellings during the year in forests in use.

This is a specialized enquiry which would be organized by the ministry responsible for forestry.

55. Volume of roundwood removals, classified as conifers and non-conifers. Annual

The information should be largely obtainable during the annual enquiries covering timber extraction enterprises. Other useful data might relate to the amount of timber transported and exported.

Fishing

56. Number of national fishing craft at a given date, classified by method of propulsion and size. Annual

Obtained from registration and licensing data, possibly supported by special surveys.

57. Number and output of fish hatcheries during the year. Annual

Information to be gathered by special survey.

58. Live and landed weight of catch during the year by national fishing craft and mobile and stationary gear units and of inland fishing catch. Quarterly

Regular information might be obtained from major buyers of fisheries products and the larger fishing enterprises. Special enquiries would be needed to cover the production of small scale fisheries enterprises.

Mining, manufacturing, construction and production of electricity, gas, water, etc.

59. The following information in respect of establishments: Quinquennial or decennial

Industry
Kind of legal or economic organization
Number of persons engaged
Capacity of machinery and equipment (power and other).

The information should preferably be obtained from an industrial census, although in the early stages use might have to be made of ad hoc sources of information and coverage might be limited to the larger establishments.

As soon as possible, a proper industrial census should be undertaken and it should include the smaller establishments. It should be noted that, for larger establishments, the records form the basis for collecting current statistics and should be kept up-to-date as far as practicable. The results in respect of smaller establishments simply provide information on the structure of industry. For notes on the distinction between larger and smaller establishments see text of paper.

60.	Value and quantity of raw materials, fuels and electricity consumed and of commodities and electricity produced during the year according to type of commodity and industry.	Annual
61.	Value added during the year by industry.	
62.	Gross capital formation during the year according to type of capital goods and industry.	

For larger establishments the information is obtained by means of annual postal questionnaires. In the early stages of statistical development it might not be possible to collect data from the smaller establishments and, in any case, these would have to be covered less frequently through area sample surveys.

The extension of coverage of current statistics is dependent on the establishment of a good register of larger enterprises and improved resources for investigation.

63.	Quantity of electricity and key individual commodities produced during the period.	Quarterly or monthly
64.	Index numbers of industrial production during the period according to industry.	

The data would be derived from a smaller sample of the establishments investigated in the annual enquiries.

Wholesale, retail and related service trades

65. The following information is needed in respect of establishments: — Quinquennial or decennial

Kind of legal or economic organization
Number of persons engaged
Kind of activity, type of operation and kind of business
Value of sales and gross margins during the year.

The information is derived from a census similar to that referred to under item 59, but distribution and service activities are normally given a lower priority.

There would be advantages in including distribution and services in a general industrial census.

66. For retail trade, value of sales during the year classified according to kind of commodity and kind of business. — Quinquennial or decennial

This series would not be practicable in the early stages of development.

67.	Value of sales and of gross margins during the year classified according to kind of business.	Annual
68.	Value of inventories in goods intended for sale at end of year by kind of business.	
69.	Gross capital formation during the year classified according to type of capital goods and kind of business.	

Obtained from sample surveys of wholesale, retail and related service establishments. The work cannot noramlly be tackled in the early stages of statistical development. Estimates of the quantity of sales have to be based on local production and import statistics and estimates of distribution margins have to be derived from price data. Direct collection of information on capital formation would normally be started later than that in respect of other series.

70.	Values of sales and of inventories at end of period by kind of business.	Quarterly or monthly

Applicable to major urban areas only.

Transport

Water transport

71.	Number, horsepower, gross registered tonnage and carrying capacity of vessels engaged in sea and inland traffic.	Annual

The data are a by-product of registration, etc. of merchant shipping.

72.	Gross tonnage of goods loaded and unloaded in sea and inland traffic, distinguishing principal ports.	Quarterly or monthly

Obtained from the records of port administrations.

73.	Gross capital formation during the year.	Annual

Obtained from figures of production and external trade in ships and related equipment as well as the records of shipping firms.

Rail transport

74.	Length of trackage.	Annual
75.	Number, power, carrying capacity and type of vehicles at a given date.	

Obtained from records of railway administration.

76.	Net freight-ton kilometers and passenger kilometers performed.	Quarterly or monthly
77.	Gross tonnage of goods loaded and unloaded in each major administrative area.	

Obtained from records of railway administration.

78.	Gross capital formation during the year by type.	Annual

Obtained from records of railway administration and figures of production and external trade for railway equipment.

Air transport

79.	Number of aircraft of registered carriers according to type.	Annual

Obtained from air transport enterprises or records of aircraft registration.

80.	Passenger kilometers and cargo and mail ton-kilometers performed by registered carriers in domestic and international traffic.	Quarterly or monthly

Obtained from records of air transport enterprises.

81.	Gross tonnage of cargo loaded and unloaded and number of passengers embarking and disembarking, classified as to whether in international or domestic transport.	Monthly

Obtained from airport administration records.

82.	Gross capital formation during the year.	Annual

Obtained from records of air transport enterprises.

Road transport

83.	Length of road according to type in each major administrative area.	Annual

Obtained from highway administrations and local authorities.

84.	Number and carrying capacity of vehicles according to type, classified by administrative area where licensed.	Annual

Obtained from the records of licensing authorities.

85.	Gross capital formation during the year.	Annual

Obtained from records of production and external trade in motor vehicles.

Household statistics

86. The following information is needed in respect of households: — Dependent on field survey programme

Household composition and number of wage earners
Number of persons engaged in household enterprises by industry
Other data relevant for stratification purposes (see notes in text of paper)

This is a census type of operation, but, because no up-to-date register of households can be maintained, it forms the preliminary stage of household surveys. National coverage, even through area samples, cannot normally be attained in the early stages of development and different parts of the country have to be taken in rotation each year. As noted under item 47, there is advantage in relating these enquiries as closely as possible to agricultural censuses and the same applies to investigations of other household industries.

As resources for field surveys are developed, there is the possibility of carrying out some work in all regions of the country each year. Data collected in the preliminary stage of household surveys can also be used to revise and amplify the results of the last population census or sample survey, as noted under item 16.

87. Household data during reference period, including information on quantities as well as values where applicable: — Dependent on field survey programme

Note: The following items are not intended to indicate the precise nature of the series to be collected, but simply show the type of information which might be obtained in household surveys and the general method of arranging questionnaires with respect to transactions data.

Receipts

Sales of goods and services by household enterprises and home produce consumed, classified by industry
Income from employment and other earned income, showing industrial origin
Income from property
Other receipts from government (farming grants, etc.)
Sales of property, classified according to domestic or type of industrial use
Loans taken by household and loans repaid by others
Miscellaneous remittances from local and overseas sources

Payments

Running costs of household enterprises, classified by industry:

Purchase of local and imported goods for processing and resale, indicating industrial origin

Hire of buildings and equipment

Hire of labour

Other running costs

Domestic expenditure

Consumable and durable goods purchased or acquired from home production, by industrial origin

Rates and taxes

Rent

Interest on hire purchase, etc.

Loans given and loan repayments

Payments on property purchased or repaired, classified by domestic or type of industrial use

Miscellaneous local and overseas remittances

Note: Receipts less payments is equal to increase in stocks and liquid assets. It may not be practicable to record these two items separately.

These surveys form the second stage of the structural enquiries referred to under item 86 above. The items relating to transactions are arranged in the form of a single balanced account because households do not normally distinguish between their enterprise and domestic activities. Questionnaires should, however, be designed so that transactions relating to enterprises can be separated at the analysis stage. Sampling arrangements for obtaining more detailed data in respect of specific items and the general method of recording are described in the text of the paper.

As indicated in connoxion with the structural series under item 86, work may be extended so that continuous operations are possible on a regional basis. Priority would normally be given to the most important producing areas and simpler enquiries would be used in areas with a high degree of subsistence consumption.

Even in the later stages of development it is likely that household surveys could not achieve annual national coverage and it would therefore be necessary to continue to deal with areas in rotation. It is, however, possible to achieve annual statistics by means of simplified enquiries carried out in intermediate years, as described in the text.

There is the additional possibility of introducing simplified survey methods which would concentrate on recording principal items only instead of complete budget data. This is not recommended for the early stages of development, since good experience of recording techniques under local conditions has to be acquired first.

It should be noted that it is also necessary to utilize data arising from the operations of marketing organizations, etc., and the relevant administrative activities of government.

88. Additional data to be collected during or in conjunction with current household surveys: — Dependent on field survey programme

Where applicable, this would be a simplified version of the series listed in respect of the principal industrial fields above. The most important topic is agriculture.

It has already been suggested above that there would be advantages in associating the collection of current agricultural statistics with household surveys whenever this is possible. The same consideration applies to data for crop forecasting and information on other household enterprises.

Wholesale and retail prices

89. Averages or relatives of sales prices received by exporters and purchase prices paid by importers during the period for each important kind of commodity. — Monthly

The prices, in domestic currency, should be gathered for samples of commodities and their varieties, possibly direct from important exporters and importers. The work would not normally be undertaken in the early stages of statistical development.

90. Averages or relatives of sales prices received by domestic producers in each industry for each important kind of commodity produced. — Monthly

The information is obtained from the larger domestic producers.

91. Index numbers of sales prices received by domestic producers in selected industries, e.g. agriculture and manufacturing. — Monthly

Computed from the data indicated under item 90.

92. Averages or relatives of prices paid by domestic producers for important basic inputs in selected industries, e.g. agriculture and manufacturing. — Monthly

The information is obtained from the larger domestic producers.

93. Index numbers of prices paid for basic inputs in selected industries. — Monthly

Computed from the data indicated under item 92.

94. Averages or relatives of prices paid by households for goods and services consumed domestically. — Monthly

The data is collected from retail enterprises and from markets.

95. Index numbers of cost of living. — Monthly

Computed from the data indicated under item 94. The weights are obtained from current houshold surveys. Initially, indices might be confined to selected categories of households in major urban areas.

The coverage should be extended when resources permit, but indices should continue to distinguish between major urban areas and rural areas.

List of publications on statistical methodology

The publications have been listed under the same reference numbers as those used for statistical series in order to provide a cross-reference between the two lists. Unless otherwise indicated, the documents have been prepared by the United Nations.

1-2. A System of National Accounts and Supporting Tables, Series F, No 2, Rev. 2.

A System of National Accounts (Proposals for the revision of SNA, 1952), E/CN.3/320.

3-6 A Manual for Economic and Functional Classification of Government Transactions, ST/TAA/M/12.

7. Balance of Payments Manual, International Monetary Fund, 1950.

8. International Financial Statistics, Jan. 1955, Vol. VIII, No 1, pp 3-7 and Jan. 1957, Vol. X, No 1, pp 2-5, International Monetary Fund.

9. Banking Statistics, Recommendations in Scope and Principles of Classification, Report of the Sub-Committee on Banking Statistics of the League of Nations Committee of Statistical Experts, Studies and Reports on Statistical Methods, No 8, pp 22-25, UN Geneva, 1947.

10. The Development of Bank Debits and Clearings and their use in Economic Analysis, George Garvy, Board of Governors of the Federal Reserve System, Washington, DC.

12. International Financial Statistics, Jun. 1953, Vol. VI, No 6, pp viii-xii, International Monetary Fund.

13. "Exchange Rate Statistics in IFS", International Financial Statistics, Jan. 1953, Vol. VI, No 1, International Monetary Fund.

16. Principles and Recommendations for National Population Censuses, Series M, No 27. Handbook of Population Census Methods, Vols I-III, UN Statistical Office.

17-18. Principles for a Vital Statistics System, Series M, No 19.

Handbook of Vital Statistics Methods, Series F, No 7.

19. International Migration Statistics, Series M, No 20.

22-23. Resolutions adopted by the Eighth International Conference of Labour Statisticians, International Labour Organisation, Geneva, 1954.

International Standards in Basic Industrial Statistics, Series M, No 17.

Industrial Censuses and Related Enquiries, Series F, No 4.

Wages and Payroll Statistics, International Labour Office, Geneva, 1949.

The Seventh International Conference of Labour Statisticians, Geneva, 1951.

25-27. Standardization of Educational Statistics, UN Educational Scientific and Cultural Organization, Dec. 1958.

29-31. General Principles of a Housing Census, Series M, No 28.

32-43. 3rd and 7th Reports of the Expert Committee on Health Statistics, UN World Health Organization.

44. Commodity Indexes for the Standard International Trade Classification, Series M, No 10, Rev.1.

Nomenclature for the Classification of Goods in Customs Tariffs, 1955, and three volumes of explanatory notes, Customs Co-operation Council, Brussells.

45. Relationship of the Standard Industrial Trade Classification to the International Standard Industrial Classification, E/CN.3/307.

46. Course on Quantum and Unit Value Indexes, UN Statistical Office, 1957.

47. Programme for the 1970 World Census of Agriculture, Food and Agriculture Organization of the UN, Rome.

48-50. Methods of Collecting Current Agricultural Statistics, FAO, 1955.

Estimation of Crop Yields, FAO, 1954.

Concepts and Definitions in Statistics of Agricultural Production, E/CN.11/STAT/Conf. 2/9, 1952 and Classification of Crops, Livestock and Poultry, E/CN.11/STAT/Conf. 2/12, 1952; Second Regional Conference of Statisticians, Economic Commission for Asia and the Far East.

52. Experience of the Food and Agriculture Organization of the United Nations in the Construction of International Index Numbers of Agricultural Production, Statistics Branch, Economics Division, FAO, III Inter-American Statistical Conference, 3212a (LASC) - 2/4/55-450, Inter-American Statistical Institute, Washington, DC.

54-55. Yearbook of Forest Products Statistics, annual, FAO.

56-58. Yearbook of Fishery Statistics, 1952-53, Vol. IV, FAO, 1955.

Purposes and Methods in Fishery Statistics, Report of the First International Meeting on Fishery Statistics held in Copenhagen, Denmark, 26-31 May 1952, FAO.

59-62. Industrial Censuses and Related Enquiries, Series F, No 4.

International Standards in Basic Industrial Statistics, Series A, No 17.

Draft Revisions to the International Standards in Basic Industrial Statistics, E/CN.3/L.40/Rev.1.

64. Index Numbers of Industrial Production, Series F, No 1.

65-70. International Recommendations in Statistics of Distribution, Series M, No 26.

71-73. International Standard Definitions for Transport Statistics, Series M, No 8.

86-87. Handbook of Household Surveys, Series F, No 10.

89-91. Statistical Commission, Report of the Seventh Session (2-3 February, 1953), E/2365, E/CN.3/163, Feb. 1953, pp. 8-10.

Index Numbers of Wholesale Prices, Statistical Commission, Ninth Session, E/CN.3/204, Dec. 1955.

94-95. International Standards for Statistics of Employment, Unemployment and the Labour Force, Cost of Living and Industrial Enquiries adopted by the Sixth International Conference of Labour Statisticians, Montreal, August 1947, pp. 17-19 and Cost of Living Statistics; International Labour Office, Geneva, 1947.

ANNEX III

A further consideration of the status of national accounts in statistics for planning purposes

In the paper reference has been made to national accounts as part of statistical programmes designed to meet planning requirements and emphasis has been placed on payments flows as an essential link between the various branches of activity because monetary values form the only convenient common unit of measurement. It therefore seems appropriate to examine the question of national accounts in a little more detail with a view to explaining the background to the remarks that have been made in the paper. In doing this, reference is made to the UN System of National Accounts and to recent work carried out by Mr. Dudley Seers in the field of African development, but it should be understood that the comments made and the method of presentation are the responsibility of the author of this paper.

2. The diagram shown on page 2 represents the standard accounts of the SNA, which are described in the UN System of National Accounts and Supporting Tables, Series F, No.2, Rev. 2. The system consists of six accounts, three of which are sub-divided into current and capital reconciliation accounts. The accounts and the inter-connecting flows of payments are numbered in the same way as in Series F, No.2, so that no detailed explanation of the diagram is needed here. In any case, most of the details appear later in the text. The balances on the left and right hand sides of the accounts in the diagram correspond with the totals of the left and right hand columns of the accounts in the publication. The over-all balance in each account is, of course, zero. The figures in brackets are a numerical example which may facilitate closer examination of the diagram and further reference will be made to these later.

3. From an examination of the diagram showing the standard accounts of the SNA, two difficulties are quickly apparent. The national income and domestic product accounts do not lend themselves easily to an

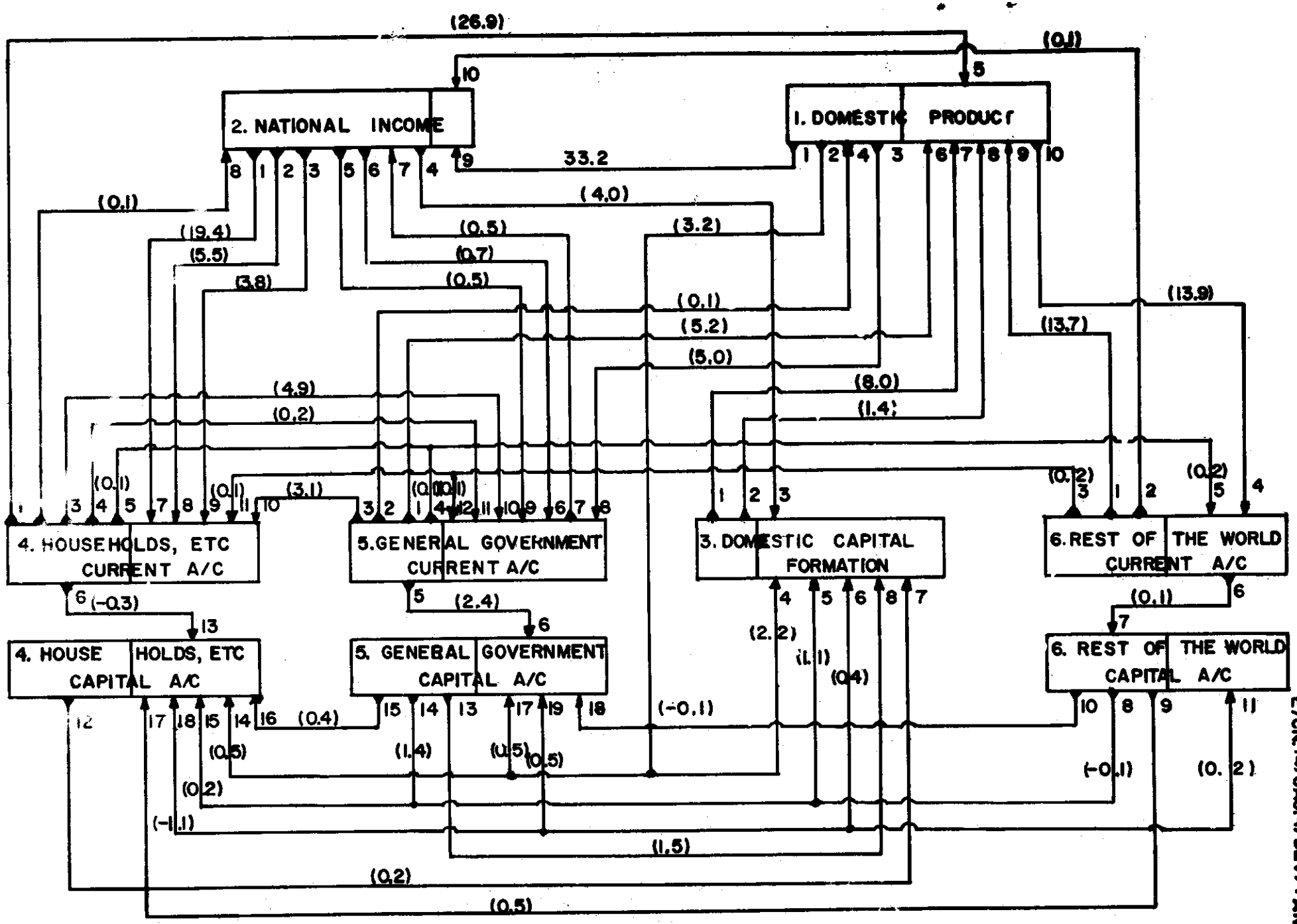

Note: For flow references see Studies in Methods, Series F, No. Rev. 2.

UN System of National Accounts
The Standard Accounts

analysis of productive activity in the context of the physical processes actually involved and, secondly, the information needed to complete the capital reconciliation accounts cannot be obtained in most African countries. It therefore appears that there would be advantages in extending the top part of the SNA diagram and eliminating the bottom. However, the removal of the capital reconciliation accounts does not imply that the information contained in them is not needed and it has been stated in the text that data on capital transactions are most important for development planning. Satisfactory accounts of these transactions may, nevertheless, have to be approached gradually.

4. A diagram including these modifications is given on page 5 and the method of arriving at the arrangement is described below. It should be clearly understood, however, that this is not suggested as an international adaptation of the SNA. The only reasons for embarking on a rather detailed discussion of national accounts are to show, firstly, that a system of accounts can be adapted to meet particular requirements without any change in basic definitions and therefore without loss of international comparability and, secondly, to emphasize that flows of transactions form an essential link between the various sectors of an economy.

5. Domestic productive activity consists essentially of transforming basic goods and services into new products which may be either final or intermediate. The final products are purchased by the final consumers, i.e. households, government, the rest of the world, and, in the case of some capital goods, by enterprises. The intermediate products are initially paid for by enterprises as the basis for further processing. This continuous cycle can be represented in simple terms by the function: Basic inputs + Value added = Gross output. The function is included in the diagram on page 5 as a production account and replaces the SNA national income account.

6. The other essential changes in the top part of the diagram are the replacement of the SNA domestic product account by one dealing with total supply and demand and the introduction of an account for inter-industry transactions.

7. The first part of the production account, basic inputs, consists of payments made in respect of imported inputs and domestically produced intermediate products. The payment for imported inputs, which forms part of flow 1.10 in the SNA, is made to the rest of the world account, while duties on these inputs, which are part of SNA flow 1.3, are paid to government. This arrangement is necessary to avoid double counting in the total supply/demand account. The other payments in respect of basic inputs are those indicated by the newly introduced flows: A, local basic inputs and B, distribution margins on inputs, which both go to the inter-industry transactions account. Precise definitions of these flows would be dependent on the data available and the most satisfactory arrangement would be one where imported inputs are valued at cif costs and local inputs at producer prices. In this case, the item for distribution margins would cover both imported and local inputs.

8. Value added, which is the second part of the production account, is equal to gross domestic product at factor cost in accordance with the normal national accounting definition. To achieve this it has been necessary to include a payment in respect of provisions for domestic fixed capital consumption (flow 1.2), which was previously paid out of the domestic product account in the SNA. Value added otherwise contains the same items as the SNA national income account.

9. Basic inputs plus value added form gross domestic output, which includes all domestically produced intermediate and final products. This is part of the total supply of goods and services, and payments made for it to the production account are indicated by the new flow E. This is equal to net domestic product at factor cost (SNA flow 1.2, 2.9) plus the cost of basic inputs and provisions for domestic fixed capital consumption.

10. The total supply/demand account deals with the same items as the domestic product account of the SNA, except that locally produced intermediate products are also included. However, the purpose of the account is somewhat different and reorientation has been necessary, as shown in the diagram. Total supply, which forms the left hand side of the account,

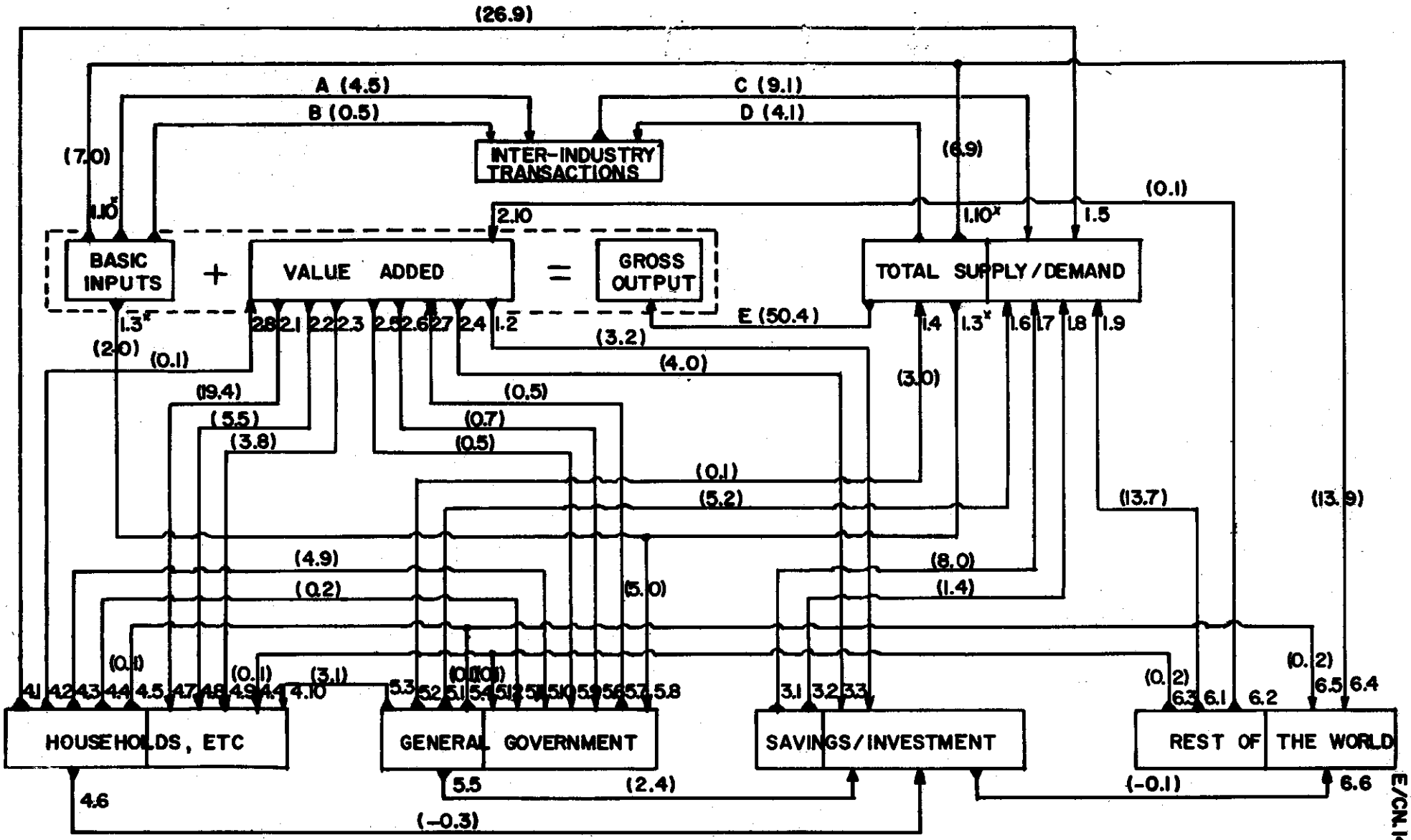

Note: For comparison with SNA see paragraphs 5—12

Extension of SNA showing intermediate products

consists of gross domestic output, as defined in paragraph 9, imported final products (part of flow 1.10), distribution margins on all final and intermediate products (new flow D) and net indirect taxes (part of flow 1.3 less flow 1.4). Total demand, the right hand side of the account, consists of household and government consumption (flows 1.5 and 1.6), gross domestic fixed capital formation and increase in stocks (flows 1.7 and 1.8), exports (flow 1.9) and sales to other sectors (new flow C).

11. Some further explanation of the treatment of basic inputs and distribution margins in the diagram is perhaps desirable and, for this, it is necessary to consider the composition of gross output. So far as individual industries are concerned, the gross output is valued at producer prices and these values also include the local input costs represented by flows A and B. Also, one of the industries contributing to the over-all value of gross output is distribution, whose total "supply" is equal to all distribution margins, i.e. B + D. The over-all position may therefore be summarized as follows:

Payments to production account from total supply/demand account:	A + B	Included in the gross output of individual industries valued at producer prices.
	B + D	Total supply of distribution industry.
	D	Distribution margins on all intermediate and final products.
Payments from production account to total supply/demand account, made through flow C:	A + B + D	

By subtracting the second set of payments from the first, it will be seen that the net payments received by the production account are B+ D, the total supply of the distribution industry. The production account is, of course, also "paid" for all intermediate products in that their value is necessarily part of the value of final products included in gross output.

12. The only other change in the diagram, as compared with the SNA accounts, is the elimination of the capital reconciliation accounts and the replacement of the domestic capital formation account by a savings/investment account. This change requires the payment of provisions for domestic fixed capital consumption (flow 1.2), savings of households and general government (flows 4.6 and 5.5) and the current balance with the rest of the world (flow 6.6) direct to the savings/investment account, instead of through the capital reconciliation accounts as before.

13. The arrangement described above is presented in tabular form on pages 8 and 9, using the numerical example already shown in the diagrams. In the last five columns of the table the figures are exactly the same as those on page 5. In the first five columns a crude industrial breakdown of the production account has been shown for purposes of illustration. It should be noted that there has been no departure from the definitions used with respect to individual flows in the SNA. The standard accounts of the SNA, with the exception of the capital reconciliation accounts, can easily be derived by omitting the figures shown on lines A, B, C, D, and E and rearranging the remainder of the data. It must be emphasized again, however, that the arrangement is only an illustration and, in the form presented, is much too abbreviated to constitute a useful set of accounts. No reference has been made to supporting tables and, for practical purposes, the industrial breakdown would need to be very much more detailed.

14. It will be seen from the above that it is not difficult to extend a system of national accounts in order to give some indication of the productive processes which take place within an economy. The extension suggested is only one of a number of possible variations. It is intended to show the basic inputs and production costs of each industry, together with a broad analysis of the supply and demand position with respect to goods and services. Intermediate products consumed and produced by each industry are shown, but there is no attempt at a detailed analysis of the transactions in these products between industries. Distribution margins have to be shown separately in order to maintain the producer

System of national accounts showing intermediate products and industrial breakdown

SNA Ref.		Mining	Manufacturing	Agriculture	Distribution	Services	Total all industries	Inter-indy transactions	Households, etc.	General government	Savings/investment	Rest of the world
	Basic inputs											
1.10[x]	Imported inputs	0.5	2.5	1.3	0.2	2.5	7.0	–	–	–	–	-7.0
1.3[x]	Duties on imported inputs	0.1	0.7	0.4	–	0.8	2.0	–	–	-2.0	–	–
A	Local basic inputs	0.3	1.5	1.1	0.3	1.3	4.5	-4.5	–	–	–	–
B	Distribution margins	–	0.3	0.1	–	0.1	0.5	-0.5	–	–	–	–
	Total inputs	0.9	5.0	2.9	0.5	4.7	14.0	-5.0	–	-2.0	–	-7.0
	Value added											
2.1	Compensation of employees	1.5	6.9	2.1	1.2	7.7	19.4		-19.4	–	–	–
2.2	Income from unincorporated enterprises	–	0.5	3.0	0.7	1.3	5.5		-5.5	–	–	–
2.3	Income from property	0.3	1.2	0.7	0.2	1.4	3.8		-3.8	–	–	–
2.4	Saving of corporations	0.4	2.1	–	0.2	1.3	4.0		–	–	-4.0	–
2.5	Direct taxes on corporations	–	0.3	–	–	0.2	0.5		–	-0.5	–	–
2.6	General government income	–	–	–	–	0.7	0.7		–	-0.7	–	–
2.7	Less interest on public debt	–	–	–	–	-0.5	-0.5		–	0.5	–	–
2.8	Less interest on consumers debt	–	–	–	-0.1	–	-0.1		0.1	–	–	–
2.10	Less net factor income from rest of world	–	–	-0.1	–	–	-0.1		–	–	–	0.1
1.2	Provisions for domestic fixed capital consn.	0.7	1.9	0.2	0.1	0.3	3.2		–	–	-3.2	–
4.3) 5.10)	Direct taxes on employees								4.9	-4.9	–	–
4.4) 5.11)	Other current transfers from households to general government								0.2	-0.2	–	–
4.5) 5.4) 6.5)	Current transfers to rest of world								0.1	0.1	–	-0.2
4.11) 5.12) 6.3)	Current transfers from rest of world								-0.1	-0.1	–	0.2
4.10) 5.3)	Current transfers from general government to households								-3.1	3.1	–	–
4.6	Saving of households								-0.3	–	0.3	–
5.5	Saving of general government								–	2.4	-2.4	–
6.6	Current balance with rest of world								–	–	-0.1	0.1
	Total value added	2.9	12.9	5.9	2.3	12.4	36.4		-26.9	-0.3	-9.4	0.2
E	Gross output	3.8	17.9	8.8	2.8	17.1	50.4	-5.0	-26.9	-2.3	-9.4	-6.8

System of national accounts (Continued)

SNA Ref.		Mining	Manufacturing	Agriculture	Distribution	Services	Total all industries	Inter-indy transactions	Households, etc.	General government	Savings/investment	Rest of the world
	Composition of supply											
E	Gross output	3.8	17.9	8.8	2.8	17.1	50.4	-5.0	-26.9	-2.3	-9.4	-6.8
1.10[x]	Imported final products	–	3.3	2.6	–	1.0	6.9	–	–	–	–	-6.9
D	Distribution margins	0.4	1.5	0.8	–	1.4	4.1	-4.1	–	–	–	–
1.3[x]	Indirect taxes	–	0.8	0.1	1.8	0.3	3.0	–	–	-3.0	–	–
1.4	Less subsidies	–	–	-0.1	–	–	-0.1	–	–	0.1	–	–
	Total supply/demand	4.2	23.5	12.2	4.6	19.8	64.3	-9.1	-26.9	-5.2	-9.4	-13.7
	Composition of demand											
C	Sales to other sectors	-0.3	-0.7	-2.3	-4.6	-1.2	-9.1	9.1	–	–	–	–
1.5	Private consumption	–	-9.1	-6.7	–	-11.1	-26.9	–	26.9	–	–	–
1.6	General government consumption	–	-1.4	-1.1	–	-2.7	-5.2	–	–	5.2	–	–
1.7	Gross domestic fixed capital formation	–	-5.8	-0.2	–	-2.0	-8.0	–	–	–	8.0	–
1.8	Increase in stocks	-0.4	-0.3	-0.5	–	-0.2	-1.4	–	–	–	1.4	–
1.9	Exports of goods and services	-3.5	-6.2	-1.4	–	-2.6	-13.7	–	–	–	–	13.7

Note: Flow numbers marked[x] indicate part of SNA flows.
Flows A - E are additions to the basic accounts of the SNA.

cost valuations for the gross output of individual industries, which are necessary in assessing technical coefficients. The industrial breakdown used in the analysis is, of course, dependent on the relative importance of the various branches of productive activity in any particular economy.

15. By showing the industrial sources of inputs it is possible to extend the arrangement to form a complete input-output analysis. However, the development of such analysis has only recently started in countries with advanced statistical services and it is likely that most African countries will have to approach this work through an intermediate stage. The type of analysis described in paragraphs 5 - 14 already calls for very detailed information and it is felt that this represents the maximum practicable objective for the majority of African countries in the immediate future. In examining the status of national accounts with respect to statistical programming we have not, therefore, envisaged a system which is more complicated than that illustrated.

16. The information coverage of the accounts themselves is clear from the items in the table on pages 8 and 9. These items, however, are only the final aggregates and it must be appreciated that a large amount of detailed supporting information is necessary in compiling the figures with any reasonable degree of accuracy. The amount and nature of the additional information required will vary between countries and will depend on the methods used in estimating individual items. Under these circumstances it is not possible to give a precise indication of the coverage of all the data associated with the accounts, but the position has been discussed in broad terms in the text of the paper.

17. One final point which should be mentioned relates to the methods of collecting statistics of enterprises. In the text of the paper it has been suggested that, for practical statistical purposes, it is necessary to consider enterprises in three groups. There are the larger enterprises which can supply information by postal questionnaires, the smaller ones which have to be investigated by direct enumeration based on area sampling, and the household enterprises which would initially be covered by general household surveys and later by more simplified

System of national accounts showing breakdown of production between organized and household enterprises

SNA Ref.		Organized enterprises: Larger	Organized enterprises: Smaller	Household enterprises	Total all industries	Inter-indy transactions	Households, etc.	General government	Savings/investment	Rest of the world
	Basic inputs									
1.10[x]	Imported inputs	4.6	1.2	1.2	7.0	–	–	–	–	-7.0
1.3[x]	Duties on imported inputs	1.3	0.3	0.4	2.0	–	–	-2.0	–	–
A	Local basic inputs	2.8	0.7	1.0	4.5	-4.5	–	–	–	–
B	Distribution margins	0.3	0.1	0.1	0.5	-0.5	–	–	–	–
	Total inputs	9.0	2.3	2.7	14.0	-5.0	–	-2.0	–	-7.0
	Value added									
2.1	Compensation of employees	13.0	3.3	3.1	19.4		-19.4	–	–	–
2.2	Income from unincorporated enterprises	–	2.7	2.8	5.5		-5.5	–	–	–
2.3	Income from property	3.1	–	0.7	3.8		-3.8	–	–	–
2.4	Saving of corporations	4.0	–	–	4.0		–	–	-4.0	–
2.5	Direct taxes on corporations	0.5	–	–	0.5		–	-0.5	–	–
2.6	General government income	0.7	–	–	0.7		–	-0.7	–	–
2.7	Less interest on public debt	-0.5	–	–	-0.5		–	0.5	–	–
2.8	Less interest on consumers' debt	-0.1	–	–	-0.1		0.1	–	–	–
2.10	Less net factor income from rest of world	-0.1	–	–	-0.1		–	–	–	0.1
1.2	Provisions for domestic fixed capital consumption	3.2	–	–	3.2		–	–	-3.2	–
4.3) 5.10)	Direct taxes on employees						4.9	-4.9	–	–
4.4) 5.11)	Other current transfers from households to general govt.						0.2	-0.2	–	–
4.5) 5.4) 6.5)	Current transfers to rest of world						0.1	0.1	–	-0.2
4.11) 5.12) 6.3)	Current transfers from rest of world						-0.1	-0.1	–	0.2
4.10) 5.3)	Current transfers from general government to households						-3.1	3.1	–	–
4.6	Saving of households						-0.3	–	0.3	–
5.5	Saving of general govt.						–	2.4	-2.4	–
6.6	Current balance with rest of world						–	–	-0.1	0.1
	Total value added	23.8	6.0	6.6	36.4		-26.9	-0.3	-9.4	0.2
E	Gross output	32.8	8.3	9.3	50.4	-5.0	-26.9	-2.3	-9.4	-6.8

System of national accounts (cout'd)

SNA Ref.		Organized enterprises: Larger	Organized enterprises: Smaller	Household enterprises	Total all industries	Inter-indy transactions	Households, etc.	General government	Savings/investment	Rest of the world
	Composition of supply									
E	Gross output	32.8	8.3	9.3	50.4	-5.0	-26.9	-2.3	-9.4	-6.8
1.10[x]	Imported final products	5.2	-	1.7	6.9	-	-	-	-	-6.9
D	Distribution margins	2.7	0.7	0.7	4.1	-4.1	-	-	-	-
1.3[x]	Indirect taxes	1.6	0.4	1.0	3.0	-	-	-3.0	-	-
1.4	Less subsidies	-0.1	-	-	-0.1	-	-	0.1	-	-
	Total supply/demand	42.2	9.4	12.7	64.3	-9.1	-26.9	-5.2	-9.4	-13.7
	Composition of demand									
C	Sales to other sectors	-4.4	-1.1	-3.6	-9.1	9.1	-	-	-	-
1.5	Private consumption	-17.5	-4.0	-5.4	-26.9	-	26.9	-	-	-
1.6	General government consumption	-3.6	-0.7	-0.9	-5.2	-	-	5.2	-	-
1.7	Gross domestic fixed capital formation	-5.7	-1.4	-0.9	-8.0	-	-	-	8.0	-
1.8	Increase in stocks	-0.9	-0.2	-0.3	-1.4	-	-	-	1.4	-
1.9	Exports of goods and service	-10.1	-2.0	-1.6	-13.7	-	-	-	-	13.7

Note: See footnote to table on pages 8 and 9.